Alle Rechte vorbehalten/ *All rights reserved*

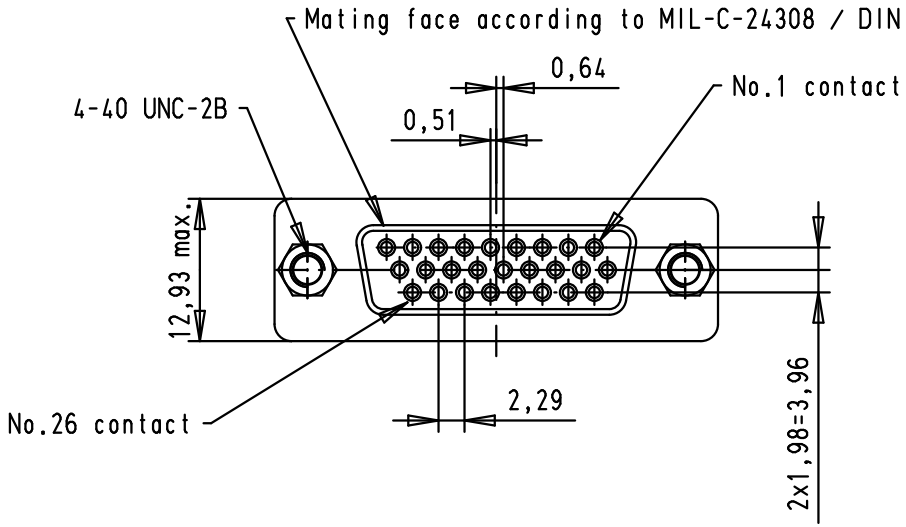

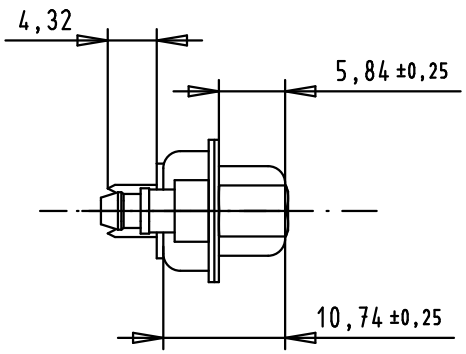

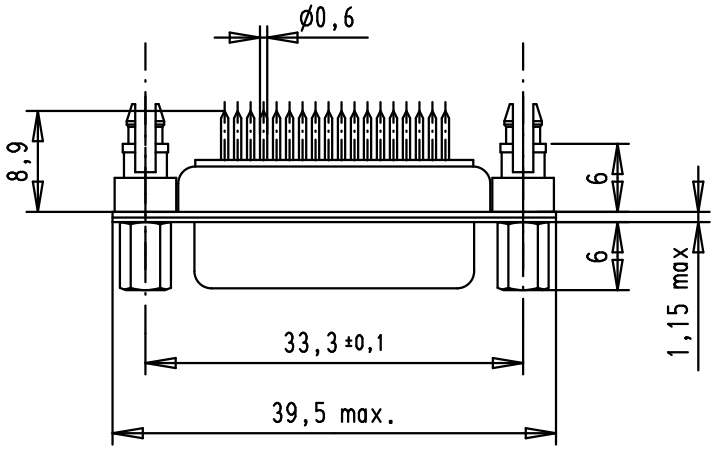

Printed board layout, component side
PCB thickness 1,6mm

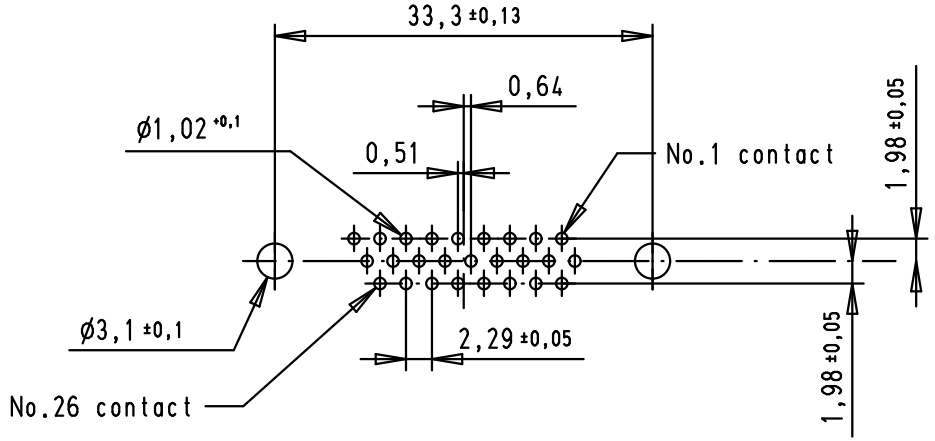

09562515513	0.76 µm Au
09562517513	3
Part number	Performance level

				Dat.	Name
36183	13/10/10	BH	Detail.	3-06-03	*S.H.*
32977	27/07/05	JMDR	Insp.		
32735	18/03/05	AL	Stand.		
32326	03/01/05	TR			
31503	3-06-03	*S.H.*			
Mod.	Dat.	Name			

All Dim. in mm
Orig. Size DIN A 4

HARTING EURL
F-95972 Paris

Dsub, 26 poles, female, straight solder pins, board locks screw lock

Maßstab/ *Scale* 1.5:1

TB 0956251x513

Sub.

Blatt/ *Page* 1/1