| REVISIONS | | | |
|---|---|---|---|
| REV | DESCRIPTION | DATE | APPROVED |
| $07_1$ | REVISED | 7/16/96 | 7/16/96 |

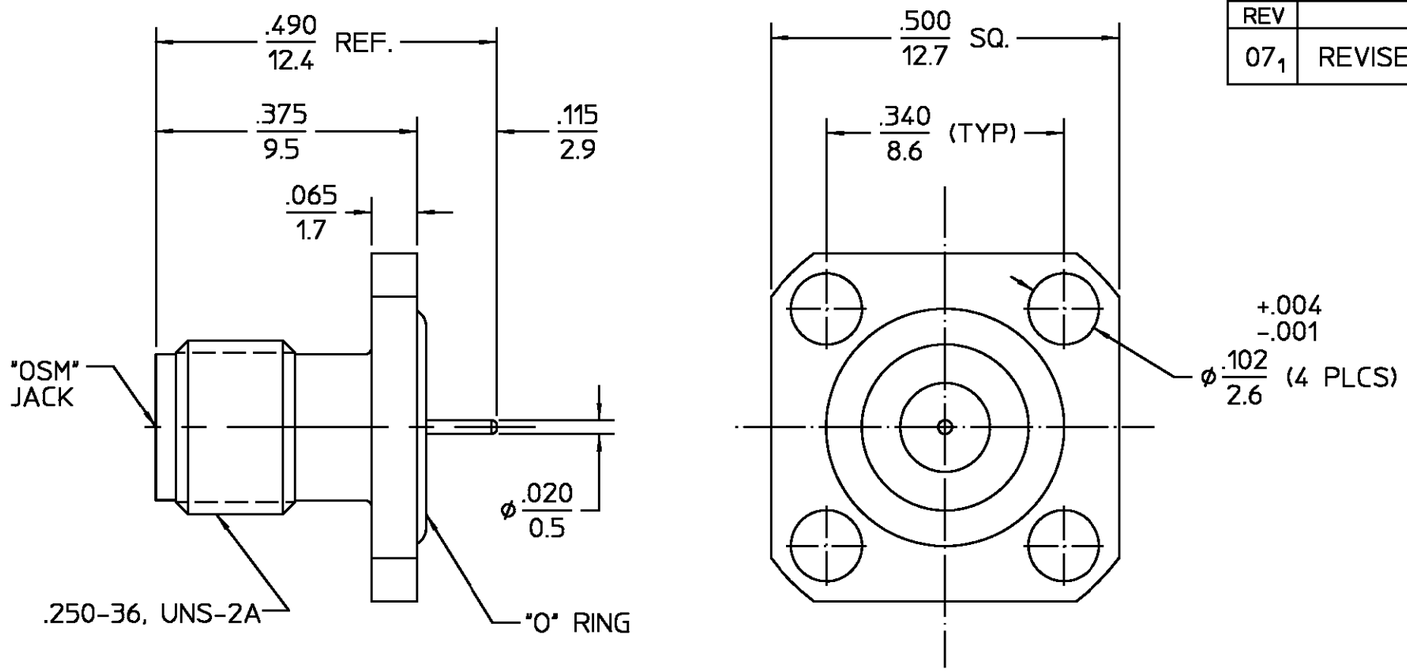


.XXX = in
XX.X = mm (REF)

| COMPONENT | MATERIAL | FINISH |
|---|---|---|
| HOUSING | STAINLESS STEEL PER ASTM-A484 AND ASTM-A582, TYPE 303 | GOLD PLATE PER MIL-G-45204 |
| DIELECTRIC | TFE FLUOROCARBON PER ASTM-D-1457 | N/A |
| CENTER CONTACT | BERYLLIUM COPPER PER ASTM-B-196 OR ASTM-B-197, ALLOY C17300, CONDITION H | GOLD PLATE PER MIL-G-45204 |
| O-RING | NITRILE (BUNA-N) PER MIL-P-25732 | N/A |

NOTES:
1. CAPTURED CENTER CONTACT

UNLESS OTHERWISE SPECIFIED DIMENSIONS ARE IN INCHES

| FRAC. | DEC. | ANGLES |
|---|---|---|
| ± 1/64 | ±.005 | ± 1° |

| | | |
|---|---|---|
| DRAWN BY S.P. | DATE 7/27/77 | |
| CHECKED BY K.W.W. | 8/10/77 | |
| APP'D BY R.M.F. | 8/12/77 | |

AMP

*AMP Incorporated*
140 Fourth Avenue
Waltham, MA 02451-7599

These drawings and specifications are the property of M/A COM Interconnect Div. and shall not be reproduced or copied or used in whole or in part as the basis for the manufacture or sale o f item(s) without written permission.

USE ASS'Y PROCEDURE

NO. A.P. N/A

TITLE "OSM" HERMETICALLY SEALED STRAIGHT PANEL JACK RECEPTACLE

| SIZE | CODE IDENT NO. | | REV |
|---|---|---|---|
| B | 26805 | 2052-3100-00 | $07_1$ |
| SCALE 5:1 | | | SHEET 1 OF 1 |

CUSTOMER DRAWING

AMP PART # 1052599-1
SHEET 1 OF 1 REV A