THIS DRAWING IS UNPUBLISHED. RELEASED FOR PUBLICATION 20
© COPYRIGHT 20 BY - ALL RIGHTS RESERVED.

REVISIONS					
P	LTR	DESCRIPTION	DATE	DWN	APVD
	J2	REVISED PER ECR-17-017609	04DEC2017	JB	DZ

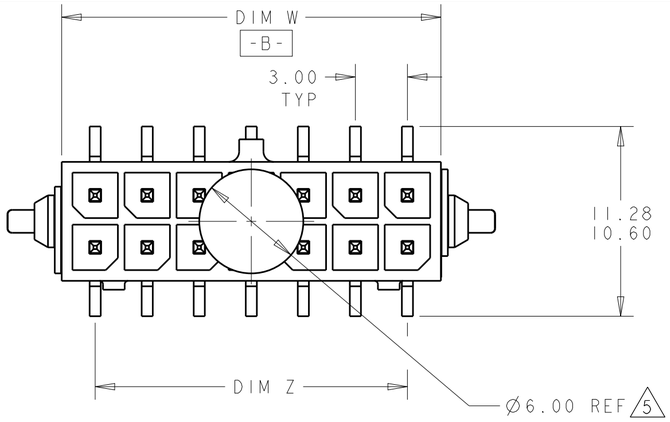

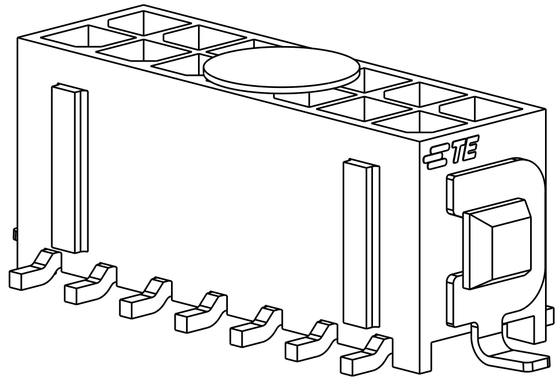

SCALE 6:1

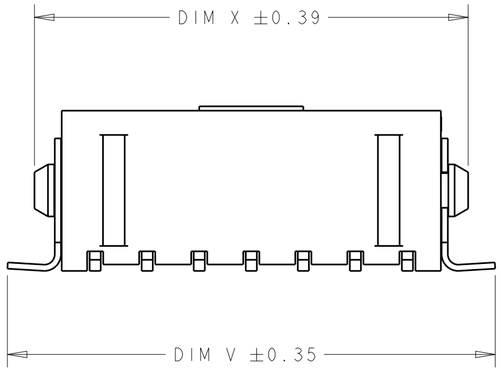

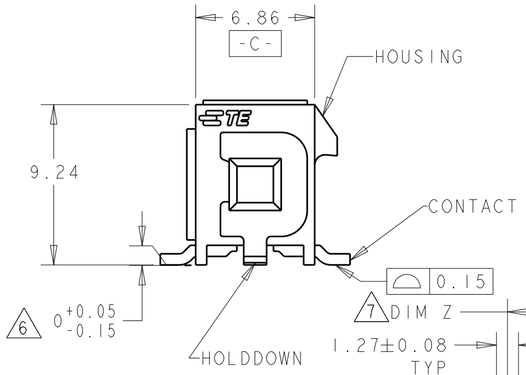

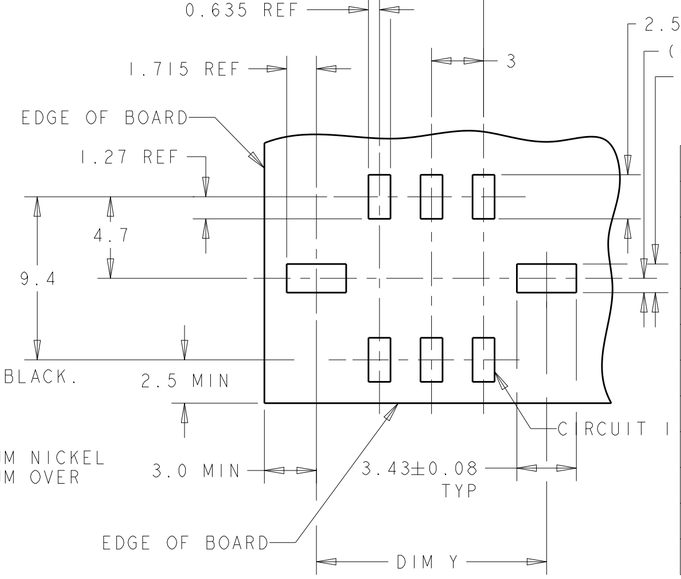

RECOMMENDED PCB LAYOUT (COMPONENT SIDE) 4

	FINISH	DIM V	DIM W	DIM Y	DIM Z	DIM X	NO. OF POSN.	PART NUMBER
	8	43.04	36.86	40.27	33.00	40.00	24	5-794637-4
	8	40.04	33.86	37.27	30.00	37.00	22	5-794637-2
	8	37.04	30.86	34.27	27.00	34.00	20	5-794637-0
	8	34.04	27.86	31.27	24.00	31.00	18	4-794637-8
	8	31.04	24.86	28.27	21.00	28.00	16	4-794637-6
	8	28.04	21.86	25.27	18.00	25.00	14	4-794637-4
	8	25.04	18.86	22.27	15.00	22.00	12	4-794637-2
	8	22.04	15.86	19.27	12.00	19.00	10	4-794637-0
	8	19.04	12.86	16.27	9.00	16.00	8	3-794637-8
	8	16.04	9.86	13.27	6.00	13.00	6	3-794637-6
	8	13.04	6.86	10.27	3.00	10.00	4	3-794637-4
	8	10.04	3.86	7.27	-	7.00	2	3-794637-2
SUPERSEDED BY 5-794637-4	2	43.04	36.86	40.27	33.00	40.00	24	~~2-794637-4~~
SUPERSEDED BY 5-794637-2	2	40.04	33.86	37.27	30.00	37.00	22	~~2-794637-2~~
SUPERSEDED BY 5-794637-0	2	37.04	30.86	34.27	27.00	34.00	20	~~2-794637-0~~
SUPERSEDED BY 4-794637-8	2	34.04	27.86	31.27	24.00	31.00	18	~~1-794637-8~~
SUPERSEDED BY 4-794637-6	2	31.04	24.86	28.27	21.00	28.00	16	~~1-794637-6~~
SUPERSEDED BY 4-794637-4	2	28.04	21.86	25.27	18.00	25.00	14	~~1-794637-4~~
SUPERSEDED BY 4-794637-2	2	25.04	18.86	22.27	15.00	22.00	12	~~1-794637-2~~
SUPERSEDED BY 4-794637-0	2	22.04	15.86	19.27	12.00	19.00	10	~~1-794637-0~~
SUPERSEDED BY 3-794637-8	2	19.04	12.86	16.27	9.00	16.00	8	~~794637-8~~
SUPERSEDED BY 3-794637-6	2	16.04	9.86	13.27	6.00	13.00	6	~~794637-6~~
SUPERSEDED BY 3-794637-4	2	13.04	6.86	10.27	3.00	10.00	4	~~794637-4~~
SUPERSEDED BY 3-794637-2	2	10.04	3.86	7.27	-	7.00	2	~~794637-2~~

794637

1 MATERIAL;
CONTACTS - BRASS.
HOUSING - UL 94V-0 RATED HIGH TEMP NYLON, COLOR; BLACK.
HOLDDOWNS - PHOSPHOR BRONZE.

2 PLATING;
CONTACTS - 0.38µm MINIMUM GOLD OVER 2.54µm MINIMUM NICKEL ON MATING AREA. 2.54µm TIN-LEAD MINIMUM OVER 2.54µm NICKEL MINIMUM ON SOLDER TAILS.
HOLDOWNS - 2.54µm TIN LEAD.

4 RECOMMENDED PC BOARD THICKNESS OF 1.57.

5 KAPTON VACUUM PICK UP BUTTON.

6 DIMENSION APPLIES TO SOLDERTAIL SURFACES AND STANDOFF SURFACES.

7 ALL SOLDERTAILS AND HOLDDOWNS.

8 PLATING;
CONTACTS - 0.38µm MINIMUM GOLD OVER 2.54µm MINIMUM NICKEL ON MATING AREA. 2.54µm MATTE TIN MINIMUM OVER 2.54µm NICKEL MINIMUM ON SOLDER TAILS.
HOLDOWNS - 2.54µm MATTE TIN.

THIS DRAWING IS A CONTROLLED DOCUMENT.

DIMENSIONS: mm

TOLERANCES UNLESS OTHERWISE SPECIFIED:
0 PLC ±-
1 PLC ±-
2 PLC ±0.13
3 PLC ±-
4 PLC ±-
ANGLES ±-
FINISH SEE TABLE

MATERIAL 1

DWN 19-MAR-2003 K. WHITAKER
CHK 19-MAR-2003 C. JONES
APVD 19-MAR-2003 C. JONES
PRODUCT SPEC -
APPLICATION SPEC -
WEIGHT -

TE Connectivity

NAME SURFACE MOUNT, VERTICAL, MECHANICAL HOLDDOWN, ASSEMBLY, 15 GOLD HEADER DUAL ROW, MICRO MATE-N-LOK TM

SIZE	CAGE CODE	DRAWING NO	RESTRICTED TO
A2	00779	C-794637	-

CUSTOMER DRAWING | SCALE 4:1 | SHEET 1 OF 1 | REV J2

1471-9 (3/13)