SERPAC H75,2AA

Electronic Enclosures

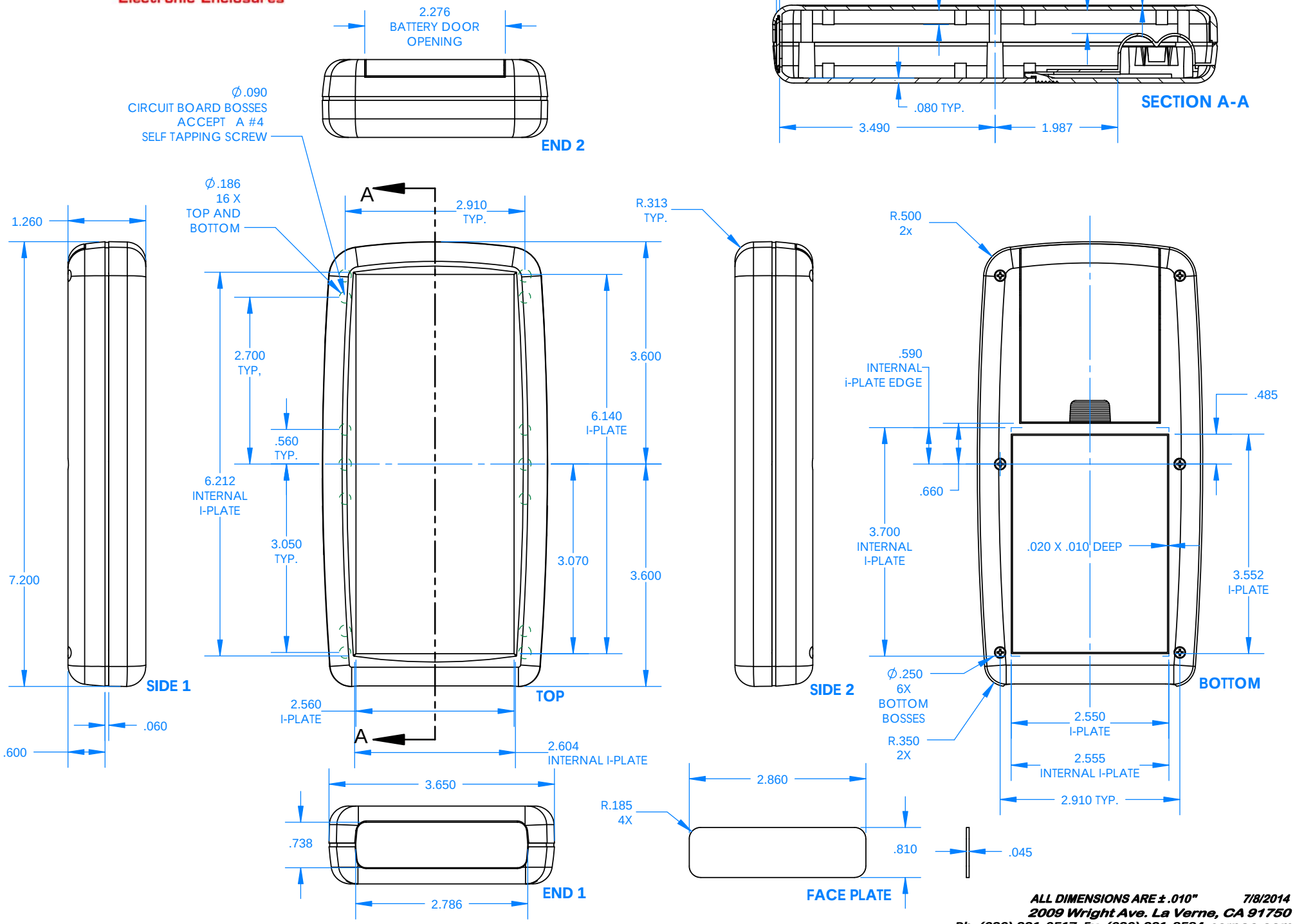

ALL DIMENSIONS ARE ± .010" 7/8/2014

2009 Wright Ave. La Verne, CA 91750

Ph. (626) 331-0517 Fx. (626) 331-8584 serpac.com