THIS DRAWING IS UNPUBLISHED. RELEASED FOR PUBLICATION -,- .
© COPYRIGHT - By - ALL RIGHTS RESERVED.

LOC	DIST
GP	00

REVISIONS

P	LTR	DESCRIPTION	DATE	DWN	APVD
	Y2	REVISED PER ECO-11-004835	11MAR11	RK	HMR

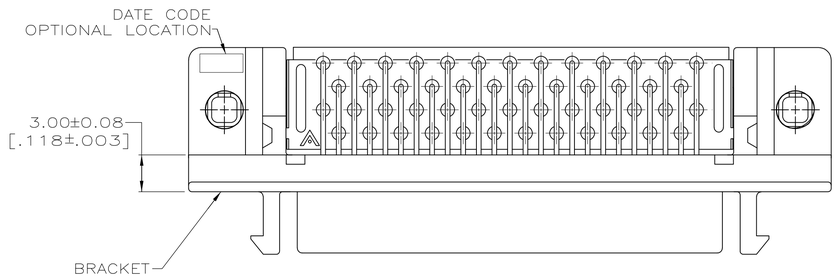

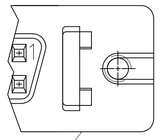

ALTERNATE BRACKET DESIGN
TYP

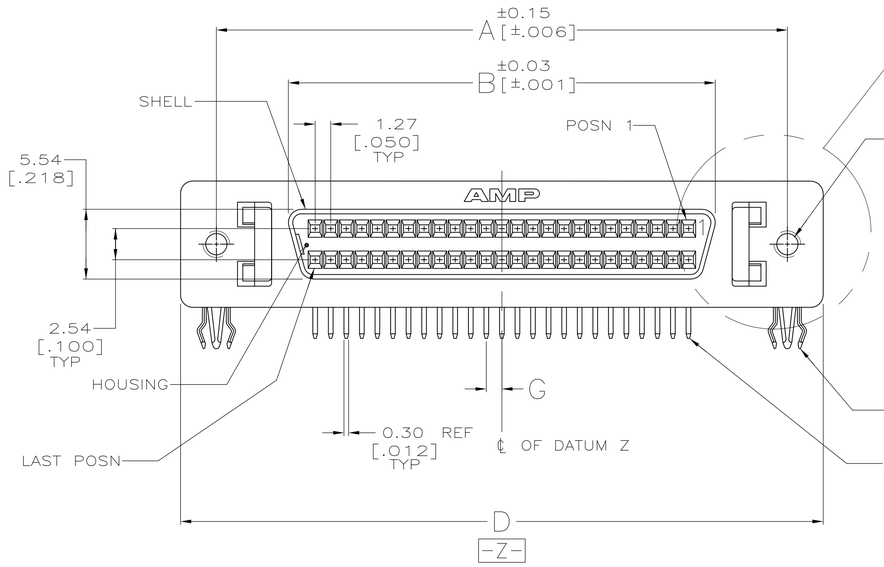

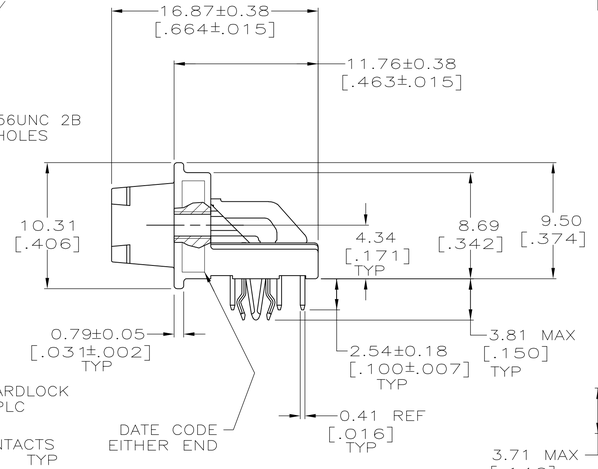

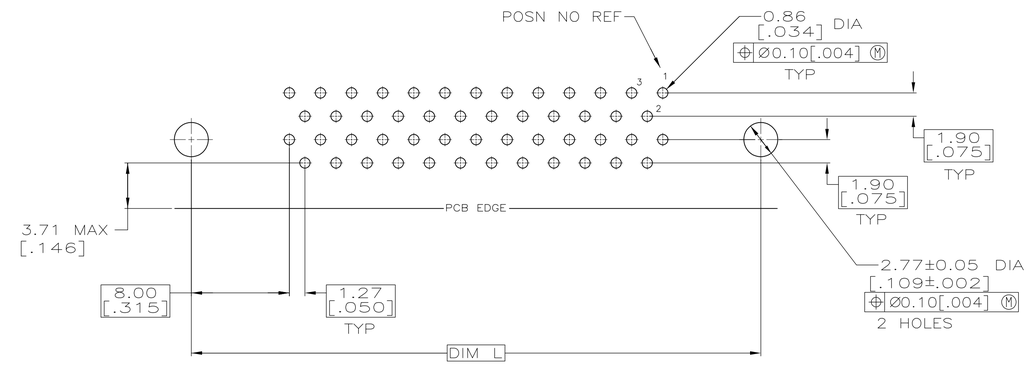

P.C.BOARD MOUNTING DIMENSIONS
CONNECTOR SIDE
P.C.BOARD THICKNESS 1.57±0.20 [.062±.008]
PC BOARD PATTERN S

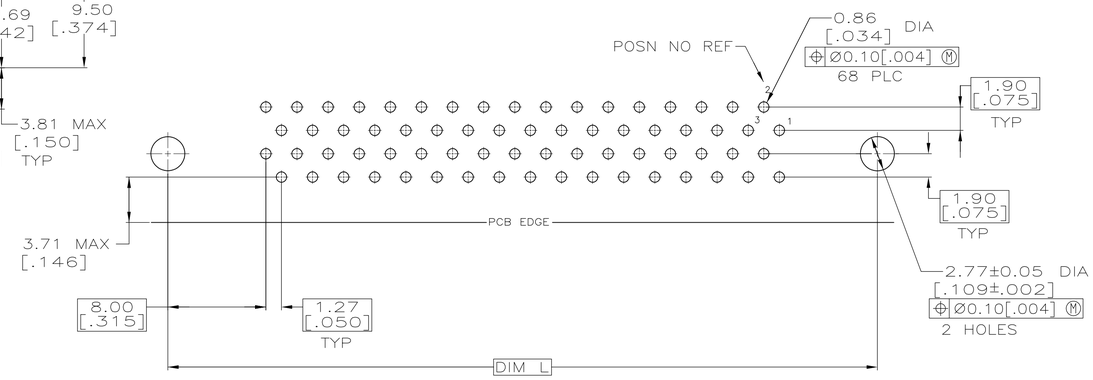

P.C.BOARD MOUNTING DIMENSIONS
CONNECTOR SIDE
P.C.BOARD THICKNESS 1.57±0.20 [.062±.008]
PC BOARD PATTERN T

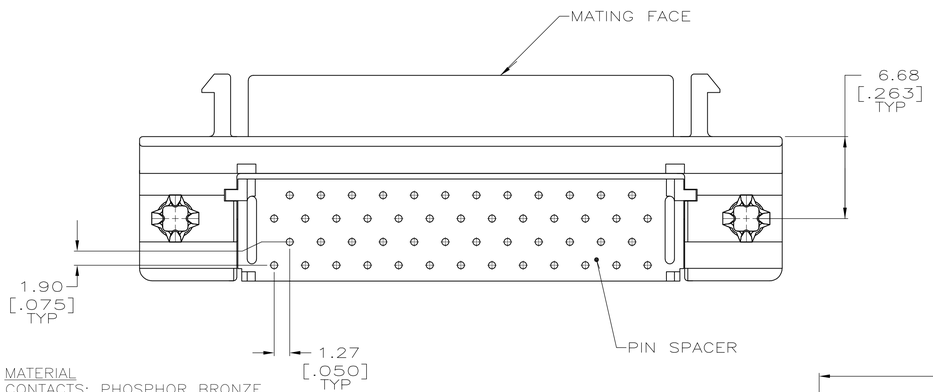

1. MATERIAL
CONTACTS: PHOSPHOR BRONZE
HOUSING & PIN SPACER: UL 94V-O RATED, THERMOPLASTIC, BLACK
BRACKET: ZINC
SHELL: CARBON STEEL
BOARDLOCKS: COPPER ALLOY.

2. FINISH
CONTACTS: EITHER 0.76μm [.000030] MIN GOLD PLATE FOR A LENGTH OF 0.64 [.025] MAX, 0.13 [.005] MIN FROM MATING END OR GOLD FLASH OVER PALLADIUM NICKEL PLATE, 0.76μm [.000030] MIN TOTAL FOR A LENGTH OF 0.64 [.025] MAX, 0.13 [.005] MIN FROM MATING END. 3.81μm [.000150] MIN TIN-LEAD FOR A LENGTH OF 2.72 [.107] MIN FROM OPPOSITE END, ALL OVER 1.27μm [.000050] MIN NICKEL UNDERPLATE.
SHELL: 5.08μm [.000200] MIN NICKEL OVER 1.27μm [.000050] MIN COPPER.
BRACKET 2.54μm [.000100] MIN NICKEL OVER 5.08μm [.000200] COPPER.

3. 5.08μm [.000200] MIN TIN-LEAD OVER 1.27μm [.000050] MIN NICKEL.

4. 3.00μm [.000118] MIN TIN OVER 1.27μm [.000050] MIN NICKEL.

5. OBSOLETE PARTS: OBSOLETE CIS STREAMLINING PER D.RENAUD/D.SINISI

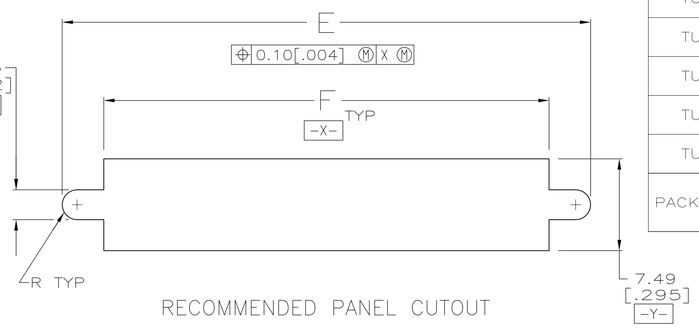

RECOMMENDED PANEL CUTOUT

	PACKAGING	BOARDLOCK FINISH	PC BOARD PATTERN	L	G	F	E	D	B	A	NO OF POSN	PART NUMBER
	TUBE	4	T	78.23 [3.080]	0.64 [.025]	74.55 [2.935]	80.67 [3.176]	84.20 [3.315]	66.45 [2.616]	78.23 [3.080]	100	1-787082-8
	TUBE	4	T	57.91 [2.280]	0.64 [.025]	54.23 [2.135]	60.35 [2.376]	63.88 [2.515]	46.13 [1.816]	57.91 [2.280]	68	1-787082-7
5 SUPERSEDED BY 5787082-5	TUBE	4	S	46.48 [1.830]	1.27 [.050]	42.80 [1.685]	48.92 [1.926]	52.45 [2.065]	34.70 [1.366]	46.48 [1.830]	50	~~1-787082-6~~
OBSOLETE	TRAY	3	S	46.48 [1.830]	1.27 [.050]	42.80 [1.685]	48.92 [1.926]	52.45 [2.065]	34.70 [1.366]	46.48 [1.830]	50	1-787082-5
	TUBE	3	T	78.23 [3.080]	0.64 [.025]	74.55 [2.935]	80.67 [3.176]	84.20 [3.315]	66.45 [2.616]	78.23 [3.080]	100	787082-9
	TUBE	3	T	57.91 [2.280]	0.64 [.025]	54.23 [2.135]	60.35 [2.376]	63.88 [2.515]	46.13 [1.816]	57.91 [2.280]	68	787082-7
	TUBE	3	S	46.48 [1.830]	1.27 [.050]	42.80 [1.685]	48.92 [1.926]	52.45 [2.065]	34.70 [1.366]	46.48 [1.830]	50	787082-5
	TUBE	3	T	32.51 [1.280]	0.64 [.025]	28.83 [1.135]	34.95 [1.376]	38.48 [1.515]	20.73 [.816]	32.51 [1.280]	28	787082-3
	TUBE	3	S	31.24 [1.230]	1.27 [.050]	27.56 [1.085]	33.68 [1.326]	37.21 [1.465]	19.46 [.766]	31.24 [1.230]	26	787082-2

THIS DRAWING IS A CONTROLLED DOCUMENT.

DIMENSIONS: INCHES
TOLERANCES UNLESS OTHERWISE SPECIFIED:
0 PLC ± -
1 PLC ± -
2 PLC ± 0.13 [.005]
3 PLC ± -
4 PLC ± -
ANGLES ± -
MATERIAL 1
FINISH 2

DWN D.BROCKWAY 12-14-93
CHK R.STONE 1-5-94
APVD -
PRODUCT SPEC 108-1228
APPLICATION SPEC 114-40029
WEIGHT -

TE Connectivity

NAME
RECEPTACLE ASSEMBLY, SHIELDED, RIGHT ANGLE, .050 SERIES, AMPLIMITE

SIZE	CAGE CODE	DRAWING NO	RESTRICTED TO
A1	00779	C-787082	-

CUSTOMER DRAWING | SCALE 4:1 | SHEET 1 OF 1 | REV Y2

4805 (3/11)