AVERY DENNISON MARKETING SPECIFICATION

THE SUBJECT MATTER DISCLOSED HEREIN EMBODIES PROPRIETARY INFORMATION WHICH IS THE CONFIDENTIAL PROPERTY OF THE AVERY DENNISON CO. NONE OF WHICH SHALL BE COPIED, REPRODUCED, DISCLOSED TO OTHERS, PUBLISHED OR USED IN WHOLE OR IN PART, FOR ANY PURPOSE OTHER THAN THAT FOR WHICH IT IS BEING MADE AVAILABLE WITHOUT THE EXPRESS ADVANCE WRITTEN PERMISSION OF A DULY AUTHORIZED AGENT OF THE COMPANY. THIS DOCUMENT IS THE PROPERTY OF THE AVERY DENNISON CO. AND IS TO BE RETURNED TO THE COMPANY ON DEMAND.

HISTORY

REV.	DATE	DESCRIPTION
A	2/27/17	INITIAL RELEASE

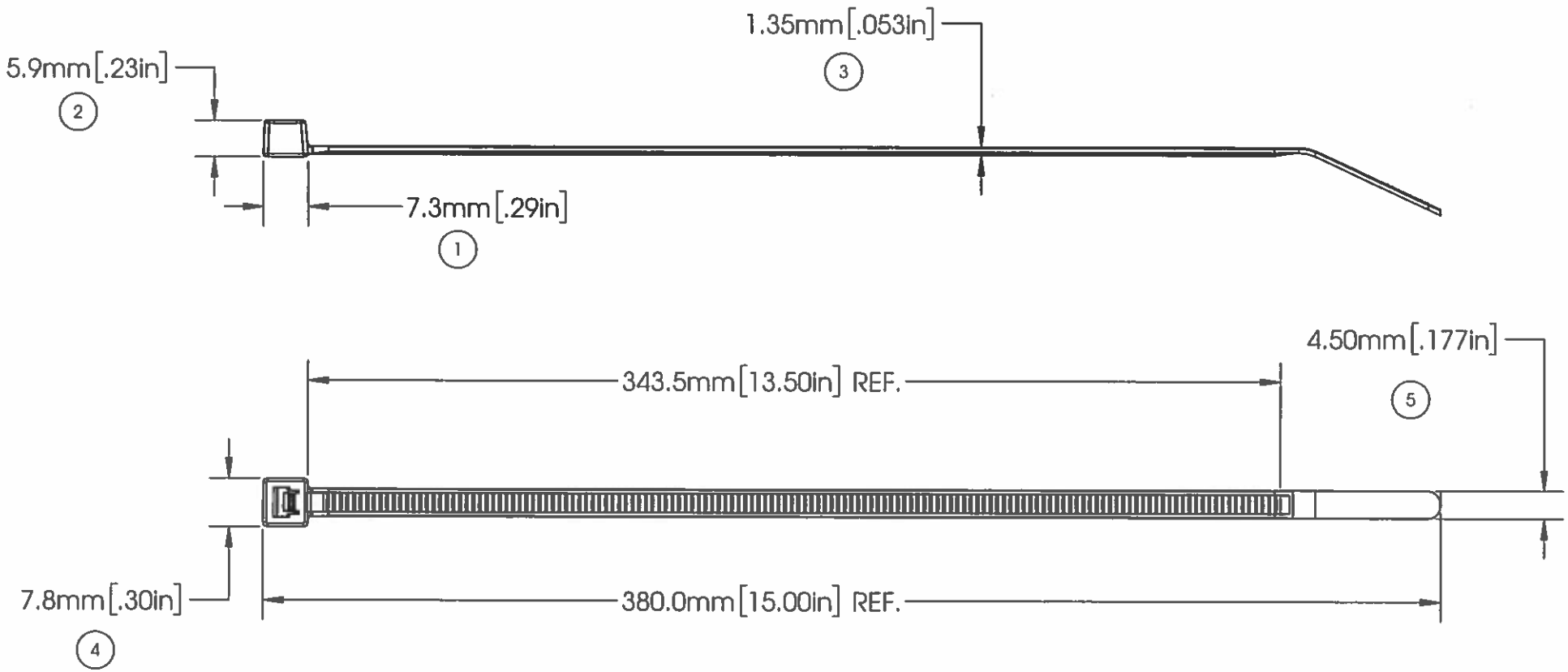

6	Δ LOOP TENSILE:	50 LBF/220 N MIN.
7	ΔFLAMMABILITY:	HB RATED PER FMVSS302
	OPERATING TEMP RANGE:	-40°F (-40°C) TO 302°F (150°C) CONTINUOUS AND 329°F (165°C) MAXIMUM EXPOSURE
	MIN. INSTALLATION TEMP:	32°F (0°C)
	WEIGHT:	2.2 g. / 0.08 oz
	BUNDLE DIAMETER:	Ø1.6mm TO Ø101.6mm(0.06" -4")
	TOOL:	12001-0 - HAND TOOL 12500-0 - PNEUMATIC TOOL
	TOOL TENSION SETTING:	6-8
	PACKAGING:	100/BAG, 1000/CASE

NOTES:
1. Δ INDICATES A SPECIAL CHARACTERISTIC

APPROVALS:
ENG. APPR. 2/27/17
Q.A. APPR. 2/27/17

SPECIFIED TOLERANCES ARE:
.XX ± .03 in .X ± .7 mm
.XXX ± .010 in .XX ± .25 mm
ANGULAR: ± 2°

MATERIAL
NYLON 6/6, IMPACT MODIFIED HEAT STABILIZED

COLOR
BROWN

AVERY DENNISON
FASTENER DIVISION
FITCHBURG, MA 01420 U.S.A.
TEL. 1-800-225-5913
FAX. 978-353-8157

DESCRIPTION
15" CABLE TIE, STANDARD, HIGH HEAT

STOCK NO. 08416-HHBN
REV. A

5 4 3 2 1