THIS DRAWING IS UNPUBLISHED. RELEASED FOR PUBLICATION -.- .
© COPYRIGHT - BY TYCO ELECTRONICS CORPORATION. ALL RIGHTS RESERVED.

LOC	DIST
GP	00

REVISIONS

P	LTR	DESCRIPTION	DATE	DWN	APVD
	O	RELEASED PER EC 0S12-0287-04	24 JUN 05	AWF	AWF

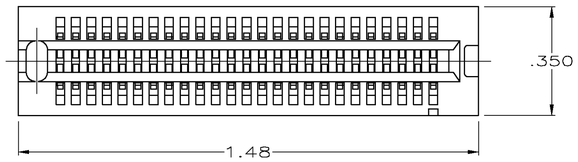

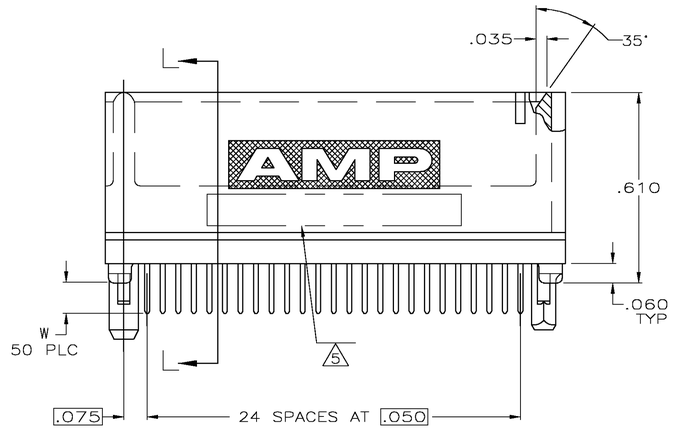

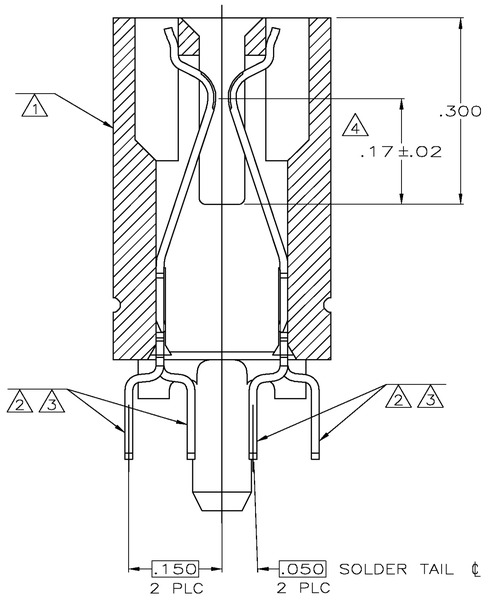

SECTION L—L
SCALE 8:1

1. HOUSING: HIGH TEMPERATURE THERMOPLASTIC. COLOR: BROWN.
2. CONTACT: PHOSPHOR BRONZE.
3. CONTACT FINISH: .000100 MIN NICKEL ALL OVER.
   .000030 MIN GOLD OVER NICKEL IN CONTACT AREA.
   .000100 MIN MATTE TIN OVER NICKEL ON SOLDER TAILS.
4. DISTANCE FROM CONTACT POINT TO BOTTOM OF CARD SLOT.
5. AMP PART NUMBER, DATE CODE AND CSA LOGO MARKED IN APPROXIMATE AREA SHOWN.

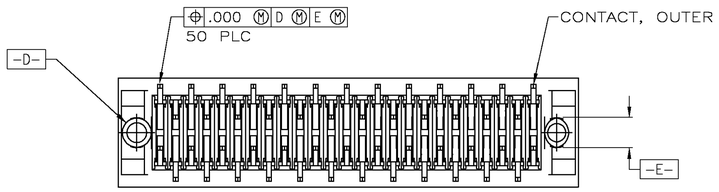

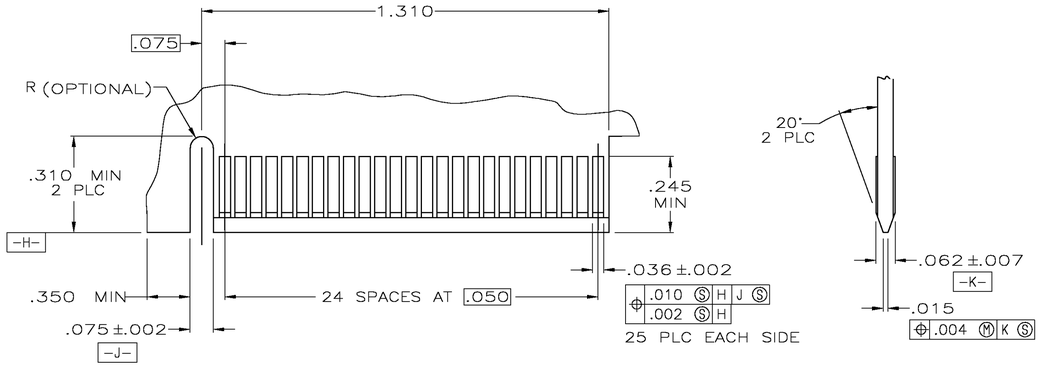

RECOMMENDED MATING BOARD EDGE CONFIGURATION

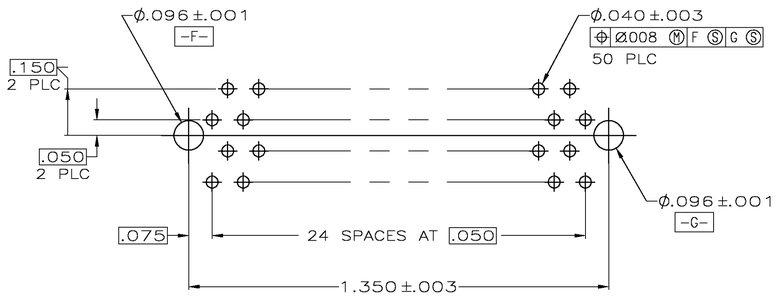

RECOMMENDED CONNECTOR MOUNTING HOLE PATTERN
(CONNECTOR SIDE SHOWN)

W	PART NUMBER
.14	5650719-2
.10	5650719-1

THIS DRAWING IS A CONTROLLED DOCUMENT.

DIMENSIONS: INCHES

TOLERANCES UNLESS OTHERWISE SPECIFIED:
0 PLC ± –
1 PLC ± –
2 PLC ± .01
3 PLC ± .005
4 PLC ± –
ANGLES ± 2

MATERIAL 1 2
FINISH 3

DWN AL FRANTUM 24 JUN 05
CHK AL FRANTUM 24 JUN 05
APVD
PRODUCT SPEC 108-14034
APPLICATION SPEC 114-26012
WEIGHT –
CUSTOMER DRAWING

Tyco Electronics Corporation
Harrisburg, Pa 17105-3608

NAME
CONNECTOR ASSEMBLY,
END KEYED, 25 DUAL POSITION,
.050 SERIES,

SIZE	CAGE CODE	DRAWING NO	RESTRICTED TO
A1	00779	C-5650719	–

SCALE 4:1 SHEET 1 OF 1 REV O