LUMILEDS

AUTOMOTIVE

SignalSure 250

High power SMD solution

SignalSure 250 is a compact, surface-mount, high power LED signaling solution that delivers an elevated standard of light output, flux density, and color uniformity. SignalSure's robust design structure, coupled with high performance specifications, ensures high quality and reliability. SignalSure 250 is AEC-Q101D qualified.

SignalSure 250 is available in the following color wavelengths:

- Red Orange (615nm)
- Super Red (630nm)
- Super Red (635nm)

FEATURES AND BENEFITS
Higher drive current capability for increased flux performance
Low thermal resistance for better hot lumen performance
Same footprint as SignalSure75 and SignalSure150 to increase PCB flexibility
AEC-Q101D qualified

PRIMARY APPLICATIONS
Rear Fog
Stop/Tail

 ©2016 Lumileds Holding B.V. All rights reserved.

Table of Contents

General Product Information **2**
Product Test Conditions 2
Part Number Nomenclature 2
Environmental Compliance 2
Performance Characteristics **3**
Product Selection Guide 3
Optical Characteristics 3
Electrical and Thermal Characteristics 3
Absolute Ratings 4
Characteristic Curves **4**
Spectral Power Distribution Characteristics 4
Light Output Characteristics 5
Forward Current Characteristics 6
Radiation Pattern Characteristics 7
Operating Limits Characteristics 7
Permissible Pulse Handling Characteristics 8
Product Bin and Labeling Definitions **9**
Designing with SignalSure 9
Decoding Product Bin Labeling 9
Luminous Flux Bins 9
Color Codes 10
Forward Voltage Bins 10
Mechanical Dimensions **10**
Reflow Soldering Guidelines **11**
JEDEC Moisture Sensitivity 11
Solder Pad Design 12
Packaging Information **13**
Pocket Tape Dimensions 13
Reel Dimensions 13
Product Labeling 14

 ©2016 Lumileds Holding B.V. All rights reserved.

General Product Information

Product Test Conditions

SignalSure 250 LEDs are tested and binned using a 20ms monopulse (MP) at 250mA drive current, junction temperature, T_J, of 25ºC.

Part Number Nomenclature

Part numbers for SignalSure 250 follow the convention below:

A 1 D L – **B C C C** L 1 2 **D E F G** 0 0

Where:

- **B** – designates color (O=Red Orange and S=Super Red)
- **C C C** – designates minimum dominant wavelength (612=612nm, 627=627nm and 632=632nm)
- **D** – designates minimum flux bin (See Product Bin and Labeling section)
- **E** – designates the flux bin range (3=3 subsequent flux bins including the minimum bin)
- **F G** – designates forward voltage range in which F is the minimum V_f bin and G is the maximum V_f bin (See Product Bin and Labeling Definitions section)

Therefore, the following part number is used for a SignalSure 250 Red Orange, 615nm minimum wavelength, luminous flux range of 36 lumens to 43 lumens and forward voltage range of 2.07 volts to 2.79 volts:

A 1 D L – **O 6 1 5** L 1 2 **U 3 A F** 0 0

Environmental Compliance

Lumileds LLC is committed to providing environmentally friendly products to the solid-state lighting market. SignalSure 250 is compliant to the European Union directives on the restriction of hazardous substances in electronic equipment, namely the RoHS Directive 2011/65/EU and REACH Regulation (EC) 1907/2006. Lumileds LLC will not intentionally add the following restricted materials to its products: lead, mercury, cadmium, hexavalent chromium, polybrominated biphenyls (PBB) or polybrominated diphenyl ethers (PBDE).

 ©2016 Lumileds Holding B.V. All rights reserved.

Performance Characteristics

Product Selection Guide

Table 1. Product selection for SignalSure 250 at 20ms MP, 250mA, T_j=25°C.

COLOR	DOMINANT WAVELENGTH [1,2] (nm)	PART NUMBER
Red Orange	615	A1DL - O612L
Super Red	630	A1DL - S627L
Super Red	635	A1DL - S632L

Notes for Table 1:
1. Dominant wavelength is derived from the CIE 1931 Chromaticity diagram and represents perceived color.
2. Lumileds maintains a tolerance of ±1nm for dominant wavelength measurements.

Optical Characteristics

Table 2. Typical optical characteristics for SignalSure 250 at 20ms MP, 250mA, T_j=25°C.

PART NUMBER	TYPICAL TOTAL INCLUDED ANGLE [1] $\theta_{0.90V}$	TYPICAL VIEWING ANGLE [2] $2\theta_{1/2}$
A1DL - O612L	140°	110°
A1DL - S627L	140°	110°
A1DL - S632L	140°	110°

Notes for Table 2:
1. Total angle at which 90% of total luminous flux is captured.
2. Viewing angle is the off axis angle from lamp center line where the luminous intensity is ½ of the peak value.

Electrical and Thermal Characteristics

Table 3. Electrical and thermal characteristics for SignalSure 250 at 20ms MP, 250mA, T_j= 25°C.

PARAMETER	PERFORMANCE
Forward Voltage, V_f	2.6V
Electrical Thermal Resistance, $R_{th\ j\text{-}c\ electr}$ [2] (Maximum)	25°C/W
Real Thermal Resistance, $R_{th\ j\text{-}c\ real}$ [3] (Maximum)	33°C/W
Temperature Coefficient of V_f, I_f = 250mA, 10°C ≤ Tc ≤ 115°C	-3.5mV/°C

Notes for Table 3:
3. All values are typical unless otherwise stated.
4. $R_{th\ j\text{-}c\ electr}$: Electrical thermal resistance (junction to case).
5. $R_{th\ j\text{-}c\ real}$: Real thermal resistance (junction to case) with wall plug efficiency included. Reference JESD51-51, JESD51-14, 4.1.3.

 ©2016 Lumileds Holding B.V. All rights reserved.

Absolute Ratings

Table 4. Absolute ratings for SignalSure 250.

PARAMETER	PERFORMANCE
Minimum DC Forward Current	10mA
Maximum DC Forward Current	300mA
Maximum Junction Temperature [1]	135°C
Operating Case Temperature at Test Current [1]	-40°C to 115°C
Operating Case Temperature at Maximum Current [1]	-40°C to 115°C
Storage Temperature	-40°C to 115°C
Soldering Temperature	JEDEC 020c 260°C
Allowable Reflow Cycles	3
Minimum ESD performance [2]	2kV HBM (Class 2), 1kV CDM (Class III)
Reverse Voltage (V_r)	-10V

Notes for 4:
1. Proper current derating must be observed to maintain junction temperature below the maximum, so that the LED is maintained below the maximum rated operating case temperature. SignalSure LEDs driven at or above the maximum rated operating case temperature may have shorter lifetime.
2. Measured using human body model (per ANSI/ESDA/JEDEC JS-001-2010) and charged device model (per JESD22-C101F).

Characteristic Curves

Spectral Power Distribution Characteristics

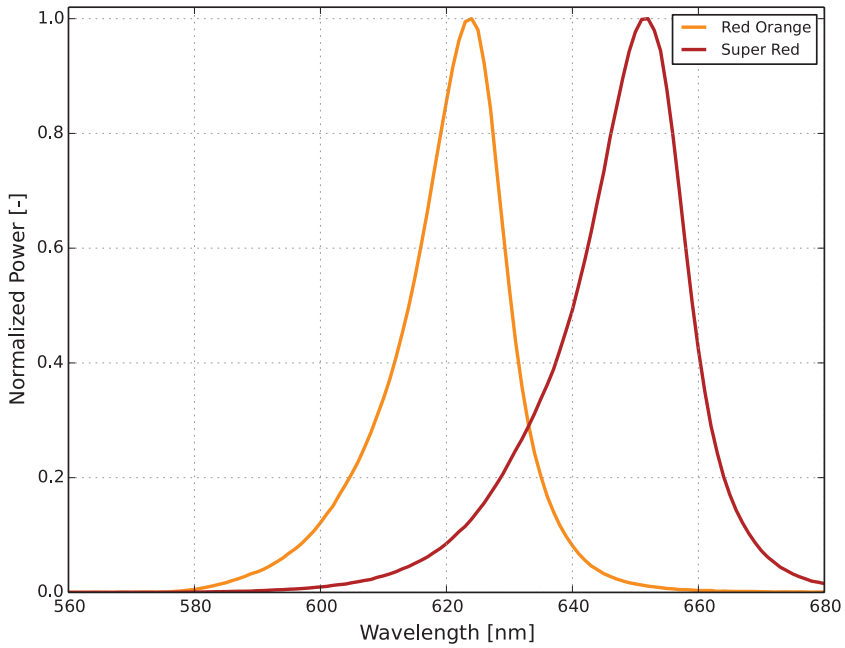

Figure 1. Typical normalized power vs. wavelength for SignalSure 250 at 20ms MP, 250mA, T_j=25°C.

 ©2016 Lumileds Holding B.V. All rights reserved.

Light Output Characteristics

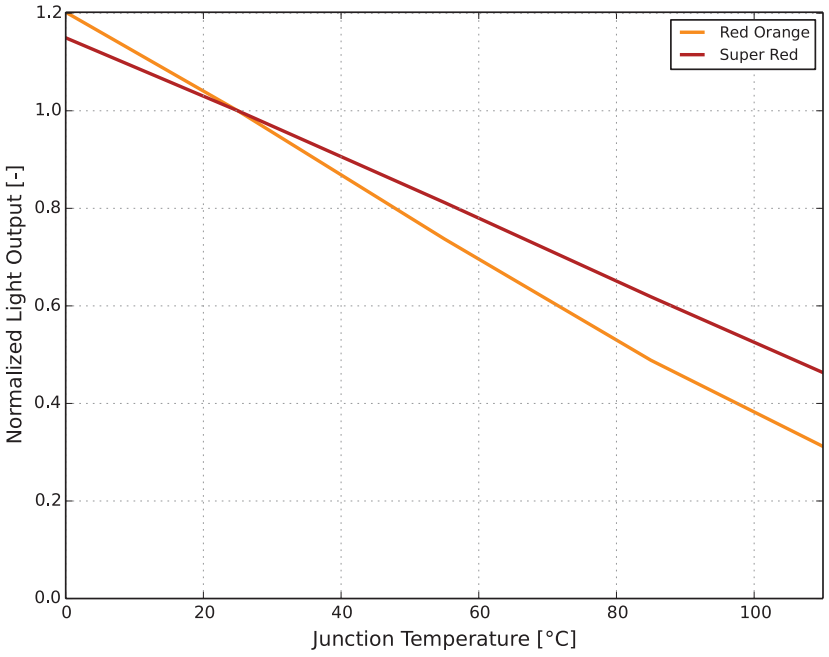

Figure 2. Typical normalized light output vs. junction temperature for SignalSure 250 at 20ms MP, 250mA.

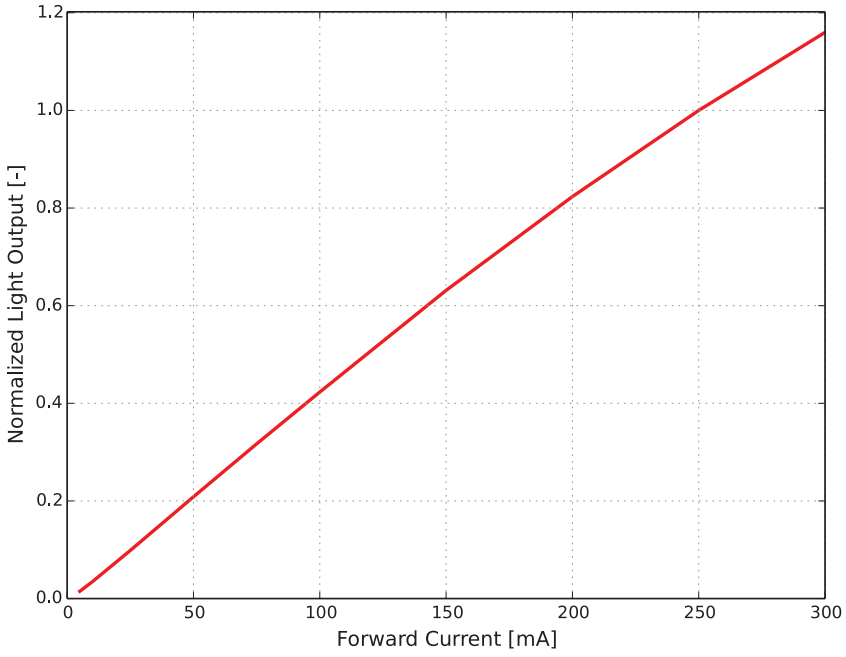

Figure 3. Typical normalized light output vs. forward current for SignalSure 250 at T_j=25ºC.

 ©2016 Lumileds Holding B.V. All rights reserved.

Forward Current Characteristics

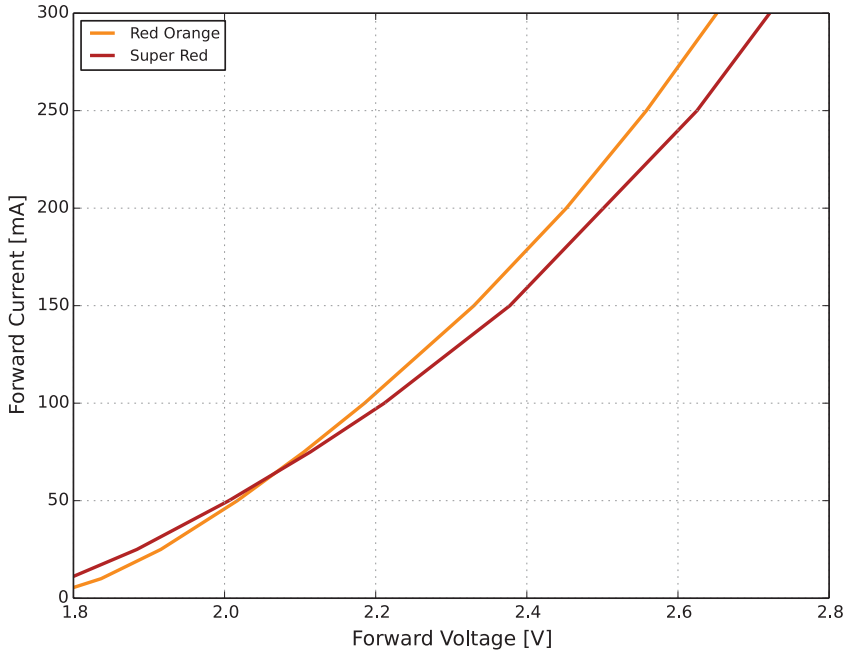

Figure 4a. Typical forward current vs. forward voltage for SignalSure 250 at T_j=25°C.

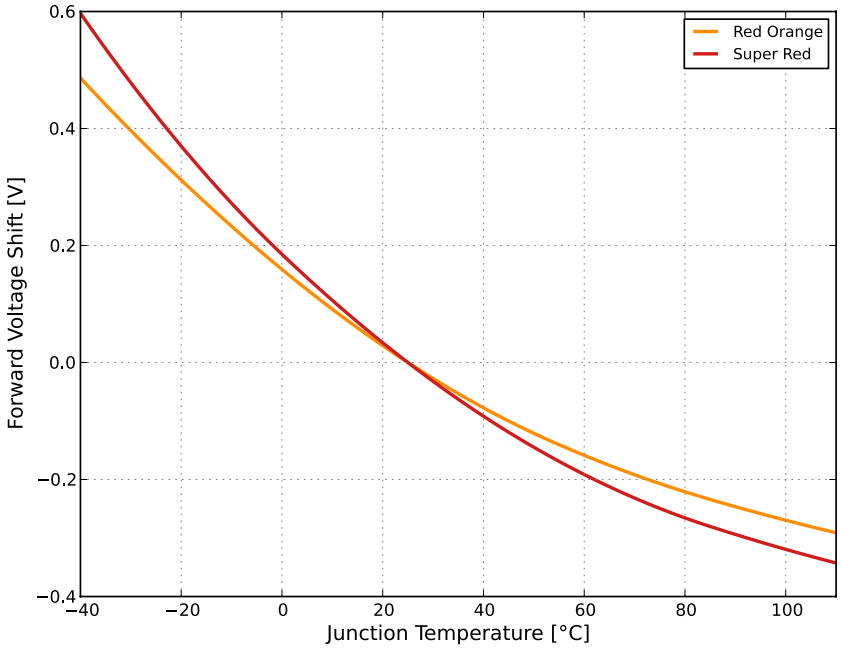

Figure 4b. Typical forward voltage shift vs. junction temperature for SignalSure 250 at 20ms MP, specified test current.

Radiation Pattern Characteristics

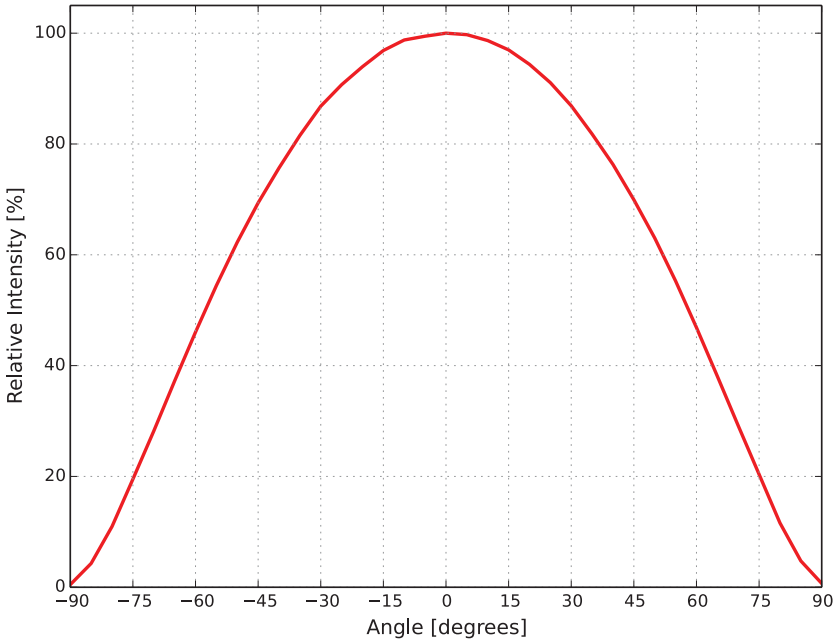

Figure 5. Typical radiation pattern for SignalSure 250 at 20ms MP, 250mA.

Operating Limits Characteristics

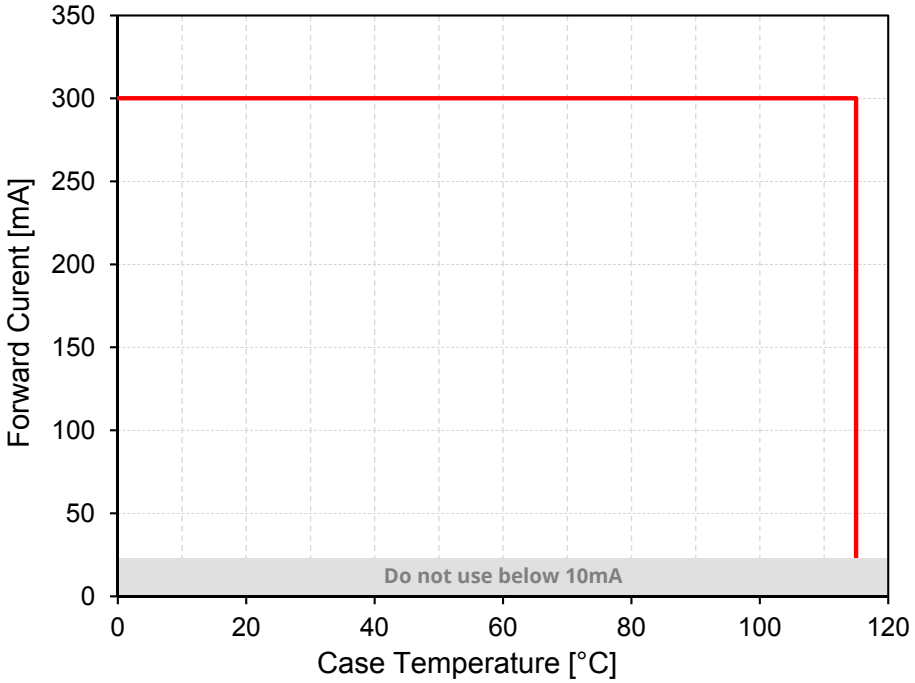

Figure 6. Maximum forward current vs. case temperature for SignalSure 250.

Permissible Pulse Handling Characteristics

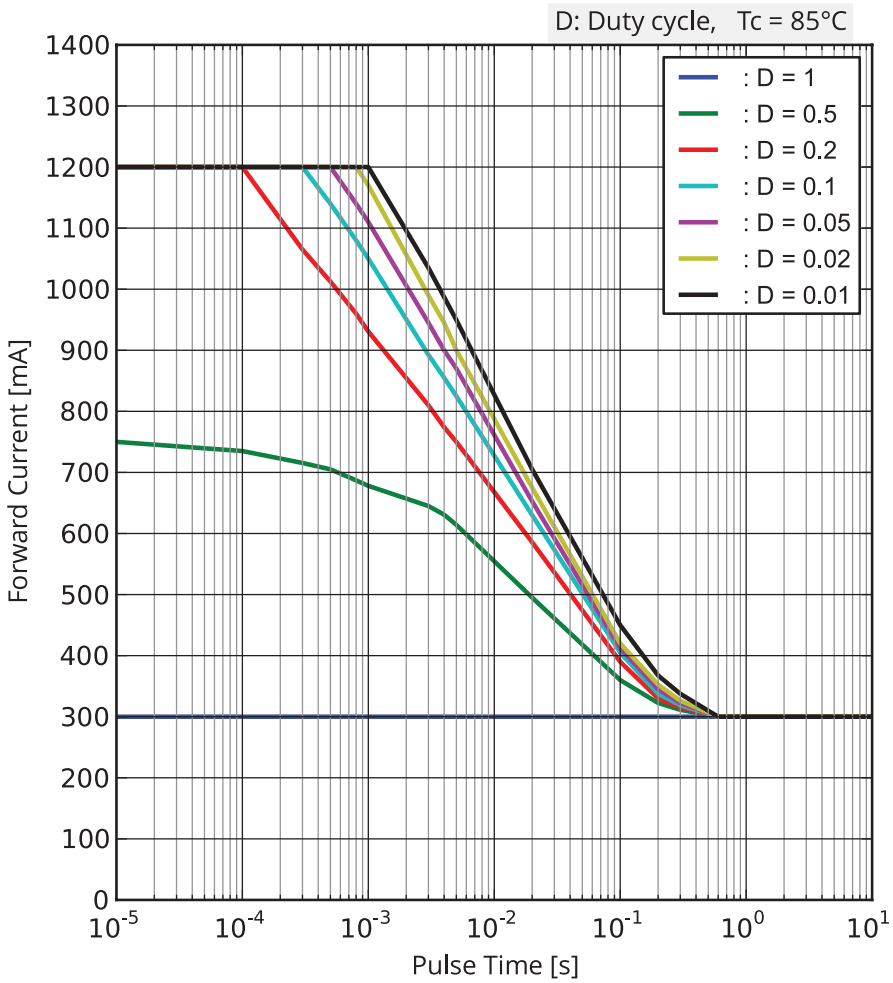

Figure 7. Permissible pulse handling capability for SignalSure 250.

Product Bin and Labeling Definitions

Designing with SignalSure

Flux bins supportable for car programs depend on product color and program start- and end-of-production date. Flux roadmaps by year and product color are maintained and available from the sales representative. Please contact your local sales representative to request the flux bin range with best supportability for program timing.

Decoding Product Bin Labeling

In the manufacturing of semiconductor products, there are variations in performance around the average values given in the technical datasheets. For this reason, Lumileds bins the LED components for luminous flux, color and forward voltage.

SignalSure 250 LEDs are labeled using a 3-digit CAT code following the format below:

A B C

A – designates luminous flux bin (example: J=15 lumens to 18 lumens)

B – designates color code (example: 3=612nm to 618nm)

C – designates forward voltage bin (example: B=2.19V to 2.31V)

Luminous Flux Bins

Table 5 lists the standard luminous flux bins for SignalSure 250 emitters. Product availability in a particular bin varies by color and platform start-of-production date. Contact your local sales representative for best supportability of programs.

Table 5. Luminous flux bin definitions for SignalSure 250 at 20ms MP, 250mA, T_j=25°C.

BIN	LUMINOUS FLUX (lm)	
	MINIMUM	MAXIMUM
H	12.0	15.0
J	15.0	18.0
M	18.0	21.0
N	21.0	25.0
P	25.0	30.0
R	30.0	36.0
U	36.0	43.0
W	43.0	52.0
X	52.0	62.0

Notes for Table 5:
1. Lumileds maintains a tolerance of ±10% on luminous flux measurements.

 ©2016 Lumileds Holding B.V. All rights reserved.

Color Codes

Table 6. Color code definitions for SignalSure 250 at 20ms MP, 250mA, T_j=25°C.

CODE	DOMINANT WAVELENGTH (nm)	
	MINIMUM	MAXIMUM
3	612	618
4	627	632
5	632	638

Notes for Table 6:
1. Lumileds maintains a tolerance of ±1nm on dominant wavelength measurements.

Forward Voltage Bins

Table 7. Forward voltage bin definitions for SignalSure 250 at 20ms MP, 250mA, T_j=25°C.

BIN	FORWARD VOLTAGE (V_f)	
	MINIMUM	MAXIMUM
A	2.07	2.19
B	2.19	2.31
C	2.31	2.43
D	2.43	2.55
E	2.55	2.67
F	2.67	2.79

Notes for Table 7:
1. Lumileds maintains a tolerance of ±0.06V on forward voltage measurements.

Mechanical Dimensions

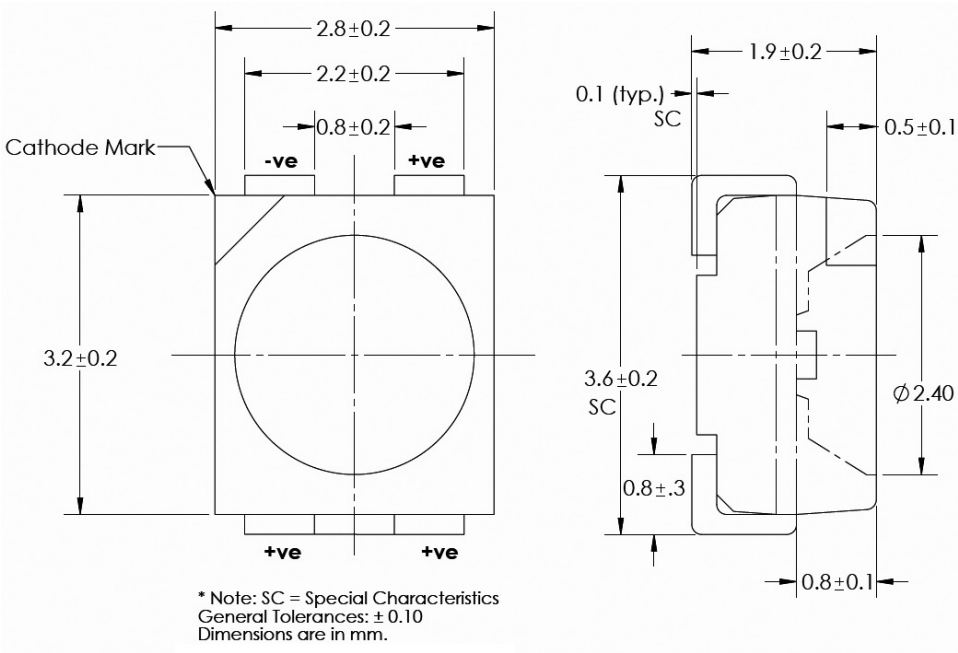

Figure 8. Mechanical dimensions for SignalSure 250.

Notes for Figure 8:
1. Drawings are not to scale.
2. All dimensions are in millimeters.

Reflow Soldering Guidelines

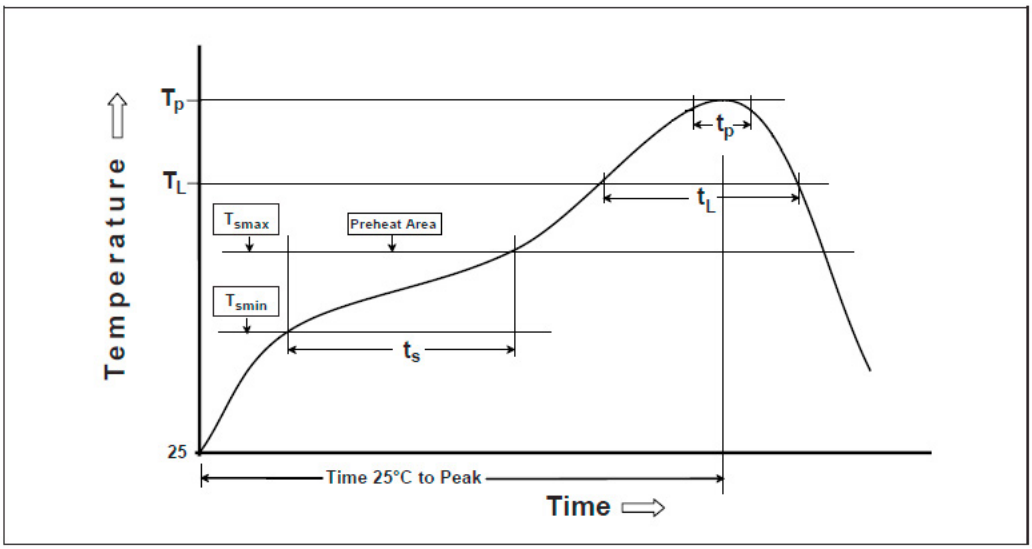

Figure 9. Visualization of the acceptable reflow temperature profile as specified in Table 8.

Table 8. Reflow profile characteristics for SignalSure 250.

PROFILE FEATURE	LEAD FREE ASSEMBLY
Preheat Minimum Temperature (Ts_{min})	150°C
Preheat Maximum Temperature (Ts_{max})	200°C
Ramp-Up Rate (T_p to T_L)	3°C / second maximum
Preheat Time (ts_{min} to ts_{max})	60 to 180 seconds
Liquidus Temperature (T_L)	217°C
Time Maintained Above Temperature T_L (t_L)	60 to 150 seconds
Peak / Classification Temperature (T_p)	260°C
Time Within 5°C of Actual Temperature (t_p)	20 to 40 seconds
Ramp-Down Rate (T_p to T_L)	6°C / second maximum
Time 25°C to Peak Temperature	8 minutes maximum

Notes for Table 8:
1. All temperatures refer to the application Printed Circuit Board (PCB), measured on the surface adjacent to the package body.

JEDEC Moisture Sensitivity

Table 9. Moisture sensitivity levels for SignalSure 250.

LEVEL	FLOOR LIFE [1]		SOAK REQUIREMENTS STANDARD	
	TIME	CONDITIONS	TIME	CONDITIONS
2	1 Year	≤30°C / 60% RH	168 Hours +5 / -0	85°C / 60% RH

Notes for Table 9:
1. Shelf life 2 years.

Solder Pad Design

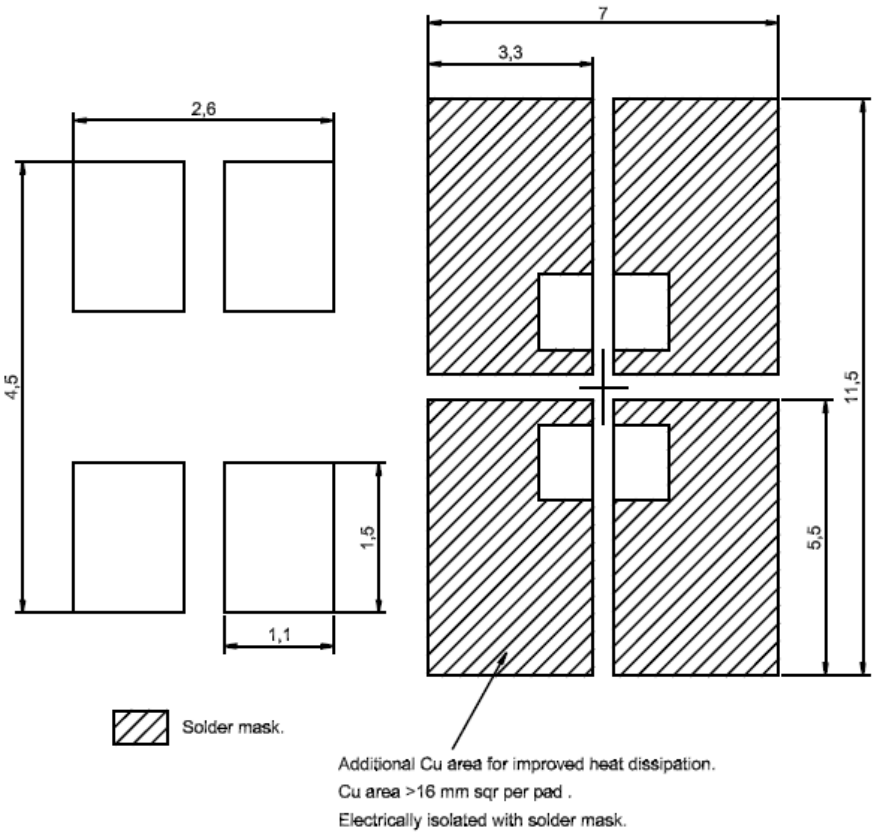

Figure 10. Recommended solder pad layout for SignalSure 250.

Notes for Figure 10:
1. The drawing shows the recommended SignalSure 250 layout on Printed Circuit Board (PCB).
2. All dimensions are in millimeters.

Packaging Information

Pocket Tape Dimensions

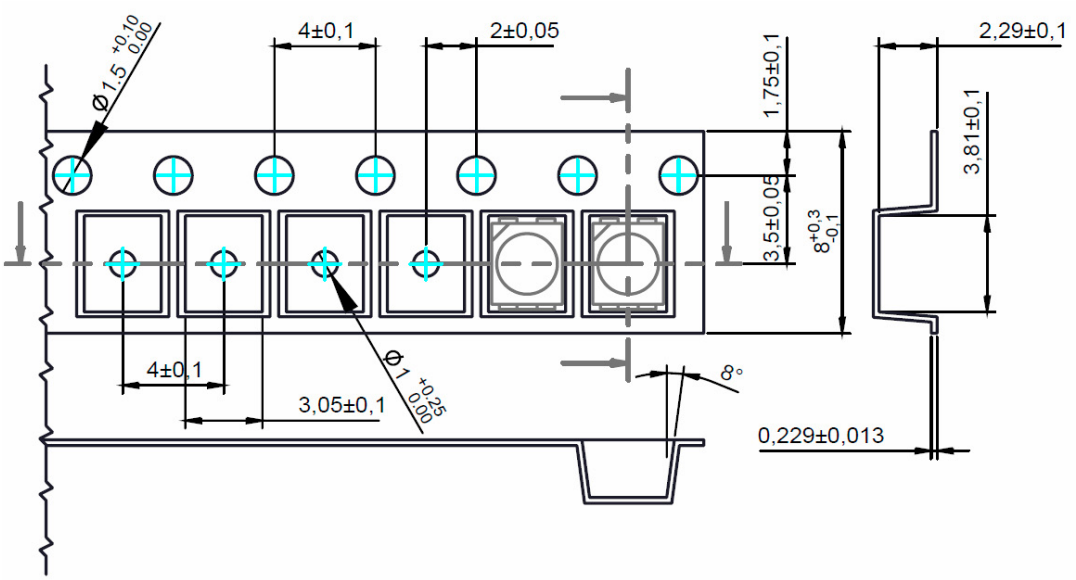

Figure 11. Pocket Tape dimensions for SignalSure 250.

Reel Dimensions

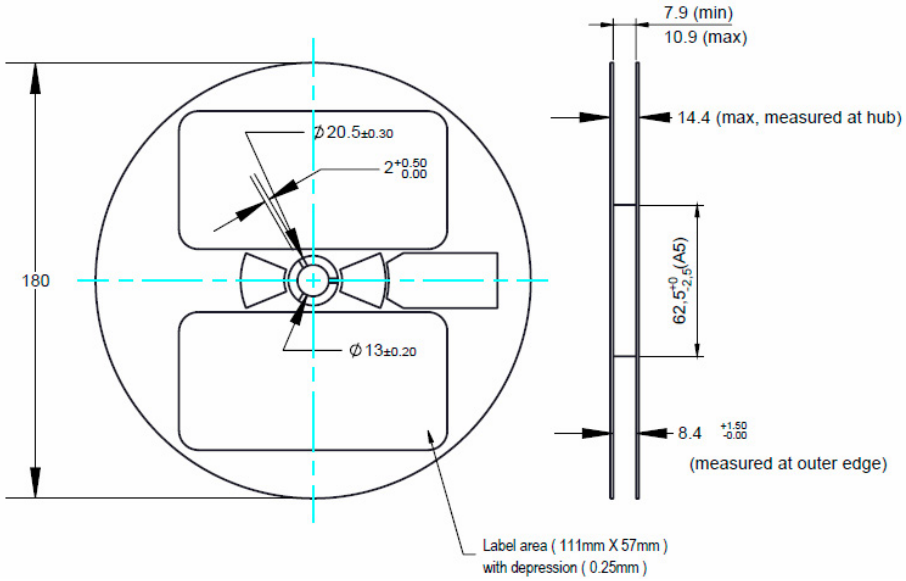

Figure 12. Reel dimensions for SignalSure 250.

Notes for Figures 11 and 12:
1. Drawings are not to scale.
2. All dimensions are in millimeters.

Product Labeling

SignalSure 250 LEDs are packaged in moisture barrier bags on reels. Both moisture barrier bag and reels have printed information providing part numbers with CAT codes that indicate luminous flux bin, color bins and forward voltage bins.

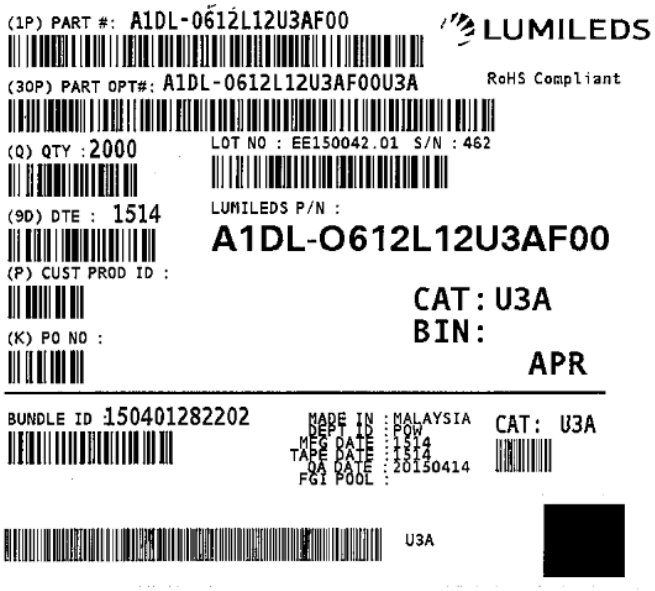

Figure 13. Example of a moisture barrier bag label.

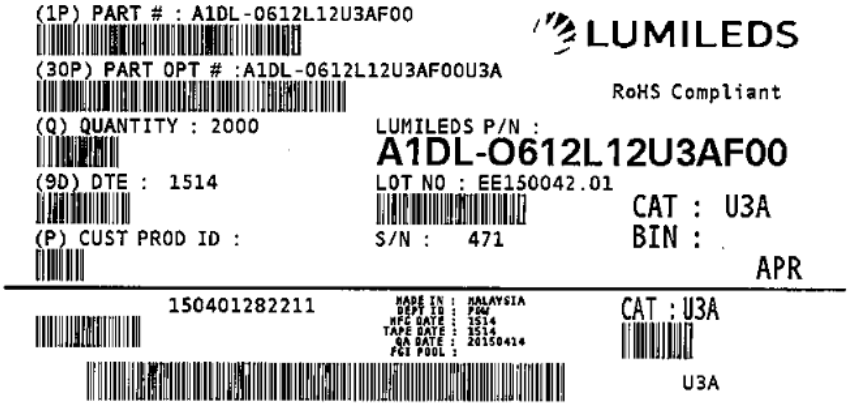

Figure 14. Example of a product reel label.

About Lumileds

Lumileds is the global leader in light engine technology. The company develops, manufactures and distributes groundbreaking LEDs and automotive lighting products that shatter the status quo and help customers gain and maintain a competitive edge.

With a rich history of industry "firsts," Lumileds is uniquely positioned to deliver lighting advancements well into the future by maintaining an unwavering focus on quality, innovation and reliability.

To learn more about our portfolio of light engines, visit lumileds.com.

©2016 Lumileds Holding B.V. All rights reserved.
LUXEON is a registered trademark of the Lumileds Holding B.V. in the United States and other countries.

lumileds.com

Neither Lumileds Holding B.V. nor its affiliates shall be liable for any kind of loss of data or any other damages, direct, indirect or consequential, resulting from the use of the provided information and data. Although Lumileds Holding B.V. and/or its affiliates have attempted to provide the most accurate information and data, the materials and services information and data are provided "as is," and neither Lumileds Holding B.V. nor its affiliates warrants or guarantees the contents and correctness of the provided information and data. Lumileds Holding B.V. and its affiliates reserve the right to make changes without notice. You as user agree to this disclaimer and user agreement with the download or use of the provided materials, information and data.