DRAWING MADE IN THIRD ANGLE PROJECTION

THIS DRAWING IS UNPUBLISHED. RELEASED FOR PUBLICATION ,19 .

© COPYRIGHT 19 BY AMP INCORPORATED. ALL INTERNATIONAL RIGHTS RESERVED.

LOC	DIST
AD	25

P	F	ZONE	LTR	DESCRIPTION	DATE	APPD
			K	EC 0010-1490-95	4/1/96	CR
			L	EC 0010-0738-96	5/20/96	CR

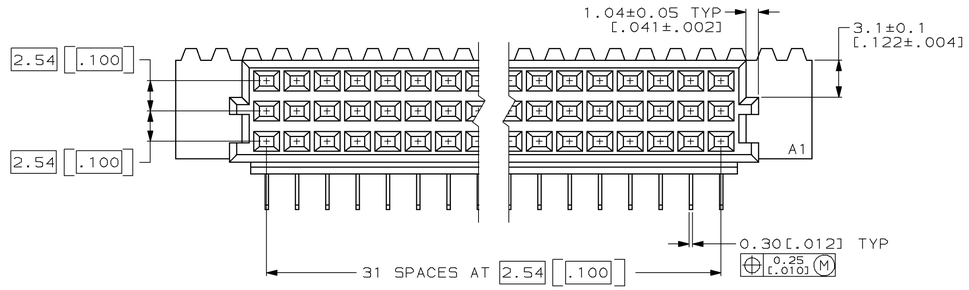

1. DIMENSIONS IN BRACKETS ARE IN INCHES.
2. HOUSING MATERIAL: GLASS-FILLED POLYESTER. COLOR: GRAY.
3. CONTACT MATERIAL: PHOSPHOR BRONZE.
4. CONTACT FINISH: 0.00076[.000030] GOLD IN CONTACT AREA. 0.00127[.000050] NICKEL UNDERPLATE ALL OVER. TIN-LEAD ON POSTS.
5. RECOMMENDED HOLE SIZE FOR MANUAL APPLICATION OF CONNECTOR ONTO PC BOARD.
6. PART NUMBER, DATE CODE IDENTIFICATION, CSA LOGO HOT-STAMPED THIS APPROXIMATE AREA.
7. CONTACT POINT.
8. HOT-STAMPING ON THIS SIDE.
9. CONTACT FINISH: DIN 41612 CLASS 3 IN CONTACT AREA. TIN-LEAD ON POSTS.
10. CONTACT FINISH: DIN 41612 CLASS 2 IN CONTACT AREA. TIN-LEAD ON POSTS.

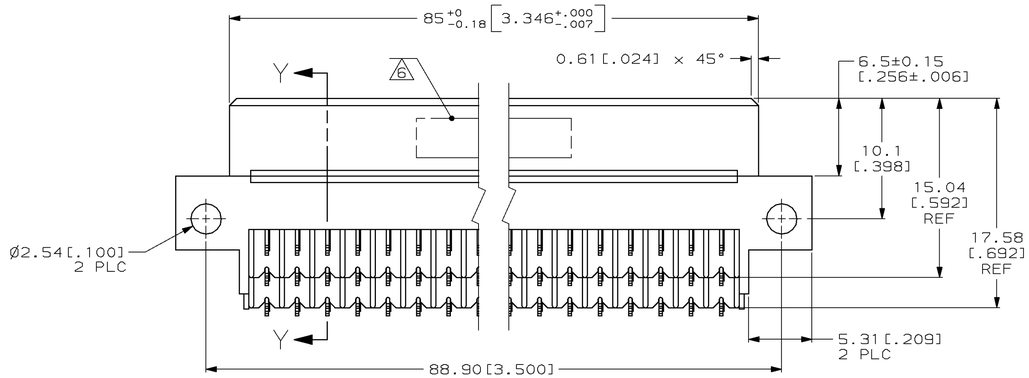

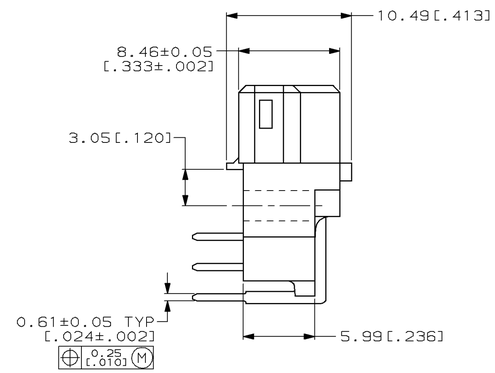

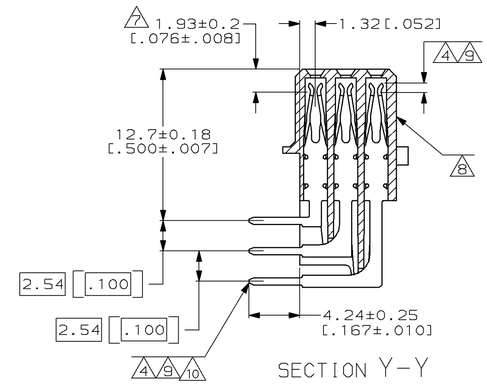

SECTION Y-Y

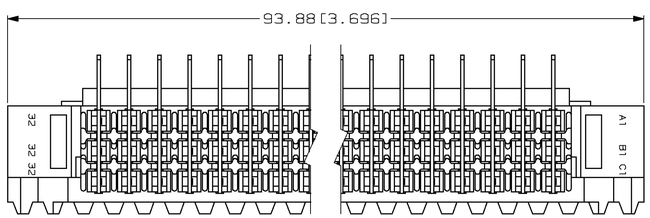

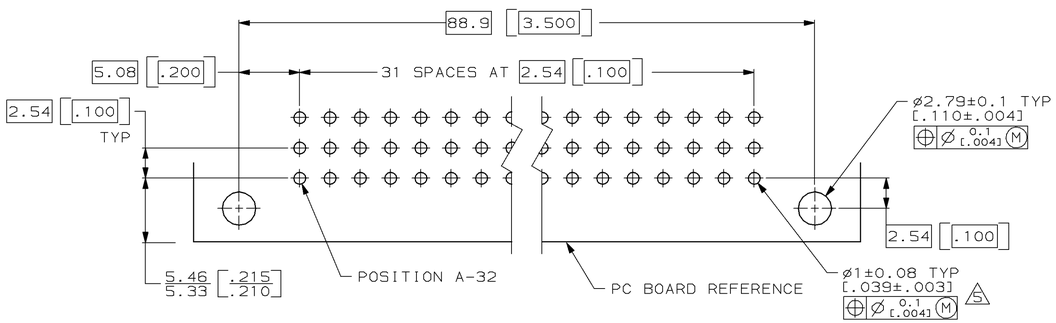

PC BOARD LAYOUT

SUPERSEDED BY 650462-4							
	9	1 THRU 32	X	X	X	96	650462-9
	10	1 THRU 32	X	X	X	96	650462-5
	4	1 THRU 32	X	X	X	96	650462-4
NOTES		POSITIONS LOADED	ROWS LOADED C	ROWS LOADED B	ROWS LOADED A	NO. OF LOADED POSITION	ASSY PART NUMBER

DO NOT SCALE PRINT.
UNLESS SPECIFIED
DIMENSIONS IN mm [INCHES]
TOLERANCES ON :
1 PLC DEC ± -
2 PLC DEC ± 0.13[.005]
ANGLES ± -

MATERIAL
HSG 2
CONT 3

FINISH
CONT 4 9 10

DR	L. BRINER	3/13/90
CHK	N. DRASHER	3/22/90
APPD	N. DRASHER	3/22/90
APPD	K.R. PARMER	3/23/90
PRODUCT SPEC	-	
APPLICATION SPEC	-	
WEIGHT	-	

AMP INCORPORATED
Harrisburg, Pa. 17105

NAME
RECEPTACLE ASSEMBLY, EUROCARD, TYPE "R"

SIZE	CAGE CODE	DRAWING NO
D	00779	650462
SCALE 4:1		SHEET 1 OF 1

CUSTOMER DRAWING

AMP 1756-3 REV 6-89

21-MAY-96 09:17:54 amp20443 /home/ssrv026d/dsk01/dept1725/amp20443/edmmod