Micro-D MWDM-CBR
Right Angle Thru-Hole
Printed Circuit Board Connectors

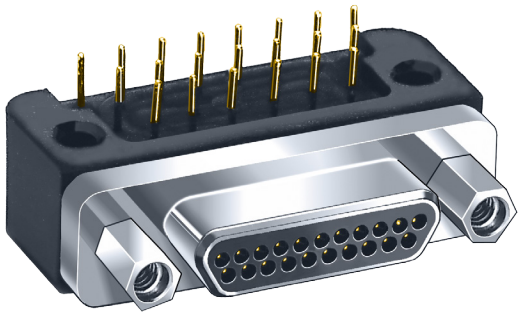

High Performance – These connectors feature gold-plated TwistPin contacts for best performance. PC tails are .020 inch diameter. Specify nickel-plated shells or cadmium plated shells for best availability.

Solder-Dipped – Terminals are coated with Sn60/Pb40 tin-lead solder for best solderability. Optional gold-plated terminals are available for RoHS compliance.

Rear Mountable – Can be installed through panels up to .125 inch thick. Specify rear panel mount jackposts.

How To Order CBR Style PCB Micro-D Connectors

Sample Part Number	MWDM	2	L	-15	P	CBR	R3	T	-.110	513

Series	**MWDM** Glenair Micro-D
Shell Material and Finish	Aluminum Shell: **1** - Cadmium **2** - Nickel **4** - Black Anodize **5** - Gold **6** - Chem Film Stainless Steel Shell: **3** - Passivated
Insulator Material	**L** - LCP or PPS LCP - 30% Glass-filled liquid crystal polymer PPS - 40% Glass-filled polyphenylene sulfide
Contact Layout	**9**, **15**, **21**, **25**, **31**, **37**, **51**, **69**, **75**, **100**, **130** (See Table II)
Contact Type	**P** – Pin **S** – Socket
Termination Type	**CBR -** Condensed Board Right Angle
Jackpost Option	(**Omit** for None) **P** – Jackpost (See Table I) Jackposts for Rear Panel Mounting: **R1** – .032" Panel **R2** – .047" Panel **R3** – .062" Panel **R4** – .093" Panel **R5** – .125" Panel **R6** – .125" Panel
Threaded Insert Option	**T** - Threaded Insert In Board Mount Hole Omit - for Thru-Hole
Terminal Lentgth in Inches	**.080**, **.110**, **.125**, **.140**, **.150**, **.172**, **.190**, **.250** Length in Inches ± .015 (0.38)
Gold-Plated Terminal Mod Code	These connectors are solder-dipped in 60/40 tin-lead solder. To delete the solder dip and change to gold-plated terminals, add code **513**

Table I: Jackpost Options

No Designator	P	R1 Thru R6
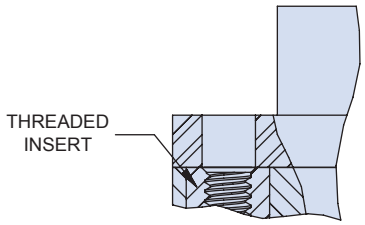	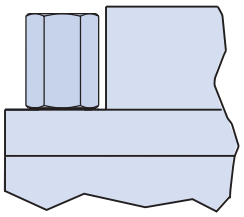	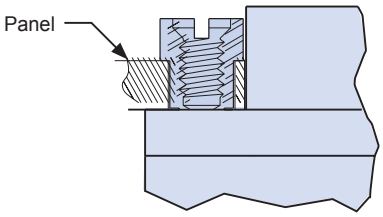
Thru-Hole For use with Glenair jackposts only. Order hardware separately. Install with threadlocking compound.	Standard Jackpost Factory installed, not intended for removal.	Jackpost for Rear Panel Mounting Shipped loosely installed. Install with permanent threadlocking compound.

© 2013 Glenair, Inc.

GLENAIR, INC. • 1211 AIR WAY • GLENDALE, CA 91201-2497 • 818-247-6000 • FAX 818-500-9912
www.glenair.com E-Mail: sales@glenair.com

Micro-D MWDM-CBR
Right Angle Thru-Hole
Printed Circuit Board Connectors

Table II: Dimensions

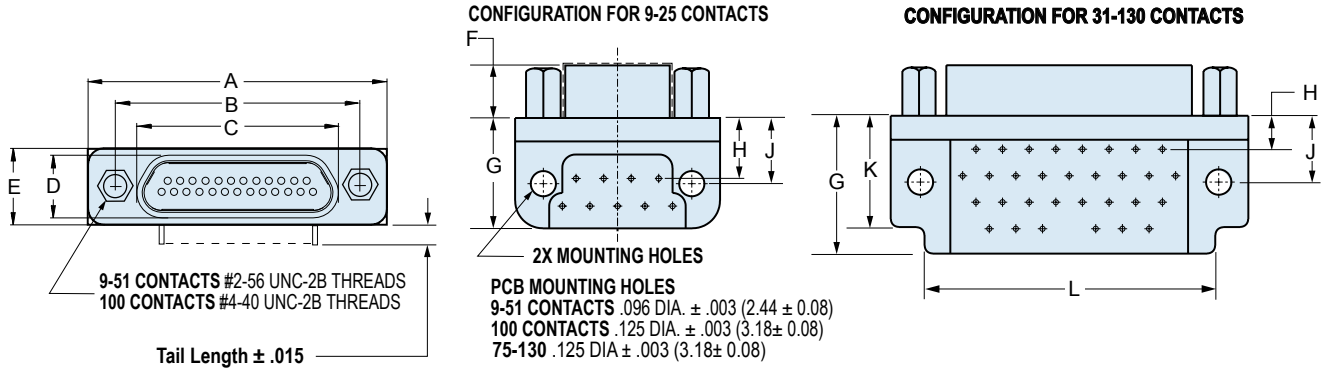

Layout	A Max.		B		C Max.		D Max.		E Max.		F		G Max.		H		J		K Max.		L Max.	
	In.	mm.	In. ±.003	mm. ± 0.08	In.	mm.	In.	mm.	In.	mm.	In. ±.003	mm. ± 0.08	In.	mm.	In. ±.010	mm. ±0.25	In. ±.010	mm. ±0.25	In.	mm.	In.	mm.
9P	.787	19.94	.565	14.35	.333	8.46	.184	4.67	.310	7.87	.183	4.65	.425	10.80	.230	5.84	.250	6.35	---	---	---	---
9S	.787	19.94	.565	14.35	.400	10.16	.250	6.35	.310	7.87	.195	4.95	.425	10.80	.230	5.84	.250	6.35	---	---	---	---
15P	.937	23.75	.715	18.16	.483	12.27	.184	4.67	.310	7.87	.183	4.65	.425	10.80	.130	3.30	.250	6.35	---	---	---	---
15S	.937	23.75	.715	18.16	.551	14.00	.250	6.35	.310	7.87	.195	4.95	.425	10.80	.130	3.30	.250	6.35	---	---	---	---
21P	1.087	27.56	.865	21.97	.633	16.08	.184	4.67	.310	7.87	.183	4.65	.425	10.80	.130	3.30	.250	6.35	---	---	---	---
21S	1.087	27.56	.865	21.97	.701	17.81	.250	6.35	.310	7.87	.195	4.95	.425	10.80	.130	3.30	.250	6.35	---	---	---	---
25P	1.187	30.01	.965	24.51	.733	18.62	.184	4.67	.310	7.87	.183	4.65	.425	10.80	.130	3.30	.250	6.35	---	---	---	---
25S	1.187	30.01	.965	24.51	.801	20.35	.250	6.35	.310	7.87	.195	4.95	.425	10.80	.130	3.30	.250	6.35	---	---	---	---
31P	1.337	33.91	1.115	28.32	.883	22.43	.184	4.67	.310	7.87	.183	4.65	.525	13.34	.130	3.30	.250	6.35	.450	11.43	1.085	27.56
31S	1.337	33.91	1.115	28.32	.951	24.16	.250	6.35	.310	7.87	.195	4.95	.525	13.34	.130	3.30	.250	6.35	.450	11.43	1.085	27.56
37P	1.487	37.72	1.265	32.13	1.033	26.24	.184	4.67	.310	7.87	.183	4.65	.525	13.34	.130	3.30	.250	6.35	.450	11.43	1.185	30.10
37S	1.487	37.72	1.265	32.13	1.101	27.96	.250	6.35	.310	7.87	.195	4.95	.525	13.34	.130	3.30	.250	6.35	.450	11.43	1.185	30.10
51P	1.435	36.45	1.215	30.86	.983	24.97	.228	5.79	.351	8.92	.183	4.65	.660	16.76	.150	3.81	.300	7.62	.450	11.43	1.225	31.12
51S	1.435	36.45	1.215	30.86	1.051	26.70	.296	7.52	.351	8.92	.195	4.95	.660	16.76	.150	3.81	.300	7.62	.450	11.43	1.225	31.12
69P	1.740	44.20	1.515	38.48	1.283	32.59	.228	5.79	.351	8.92	.183	4.65	.750	19.05	.150	3.81	.300	7.62	.450	11.43	1.530	38.86
69S	1.740	44.20	1.515	38.58	1.351	34.32	.296	7.52	.351	8.92	.195	4.95	.750	19.05	.150	3.81	.300	7.62	.450	11.43	1.530	38.86
75P	2.080	52.83	1.705	43.31	1.384	35.15	.228	5.79	.351	8.92	.183	4.65	0.750	19.05	.150	3.81	.300	7.62	.450	11.43	1.725	43.82
75S	2.080	52.83	1.705	43.31	1.450	36.83	.296	7.52	.351	8.92	.195	4.95	0.750	19.05	.150	3.81	.300	7.62	.450	11.43	1.725	43.82
100P	2.175	55.12	1.800	45.72	1.383	35.13	.270	6.86	.394	10.01	.183	4.65	1.010	25.65	.200	5.08	.400	10.16	.590	14.99	1.820	46.23
100S	2.175	55.12	1.800	45.72	1.451	36.86	.333	8.46	.394	10.01	.195	4.95	1.010	25.65	.200	5.08	.400	10.16	.590	14.99	1.820	46.23
130P	2.520	64.01	2.150	54.61	1.735	44.07	.270	6.86	.394	10.01	.183	4.65	1.010	25.65	.200	5.08	.400	10.16	.620	15.75	2.160	54.86
130S	2.520	64.01	2.150	54.61	1.735	44.07	.333	8.46	.394	10.01	.195	4.95	1.010	25.65	.200	5.08	.400	10.16	.620	15.75	2.160	54.86

Performance Specifications	
Current Rating	3 AMP
DWV	600 VAC Sea level
Insulation Resistance	5000 Megohms Minimum
Contact Resistance	8 Milliohms Maximum
Low Level Contact Resist.	32 Milliohms Maximum
Magnetic Permeability	2 µ Maximum
Operating Temperature	-55° C. to +150° C.
Shock, Vibration	50 g., 20g.
Mating Force	(10 Ounces) X (# of Contacts)

Materials and Finishes	
Connector Shell	Aluminum Alloy 6061 or Stainless Steel, 300 Series, passivated. See Ordering Info for Plating Options
Insulator, Tray	Liquid Crystal Polymer (LCP)/ Polyphenylene Sulfide (PPS)
Interfacial Seal	Fluorosilicone Rubber, Blue
Pin Contact	Copper Alloy, Gold over Nickel Plating
Socket Contact	Copper Alloy, Gold Over Nickel Plating
PCB Terminals	Gold Plated Copper Alloy, Solder Dipped
Hardware	300 Series Stainless Steel
Encapsulant	Epoxy Resin Hysol EE4215

© 2013 Glenair, Inc.

GLENAIR, INC. • 1211 AIR WAY • GLENDALE, CA 91201-2497 • 818-247-6000 • FAX 818-500-9912
www.glenair.com E-Mail: sales@glenair.com

Micro-D MWDM-CBR
Right Angle Thru-Hole
Printed Circuit Board Connectors

MICRO-D CBR Board Mount Connector PCB Layouts – Pin Connectors

Patterns shown are for connector mounting side of PC board. 9 Thru 69 Contacts .096 (2.44) Diameter Mounting Holes, 75-130 Pin .125 (3.18) Diameter

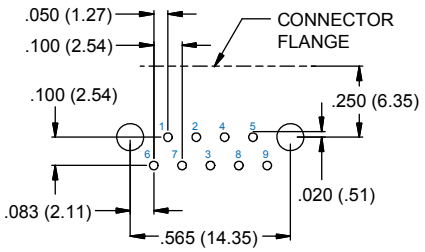

9 PIN

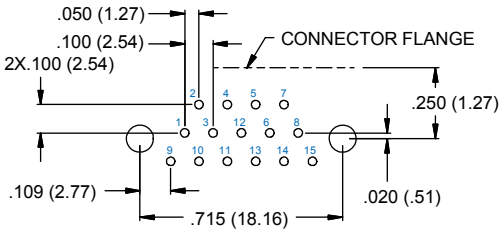

15 PIN

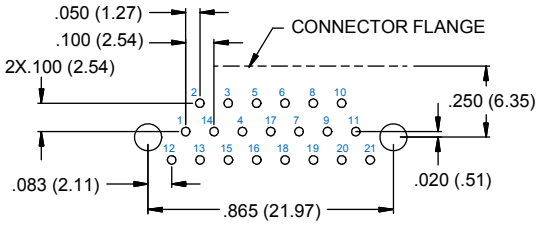

21 PIN

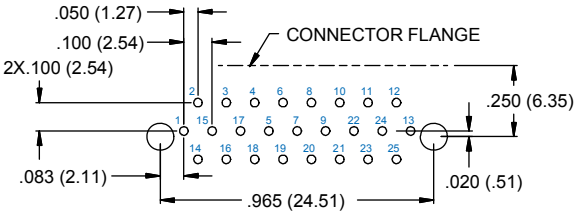

25 PIN

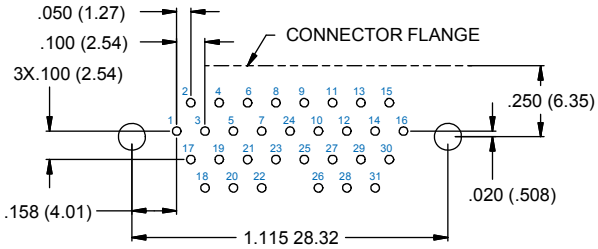

31 PIN

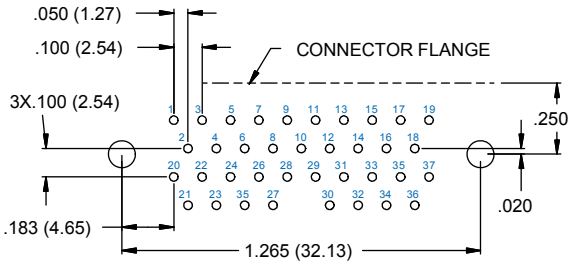

37 PIN

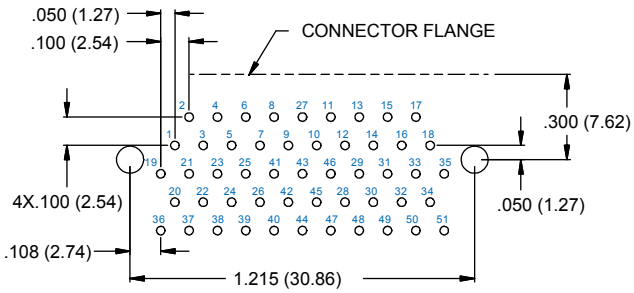

51 PIN

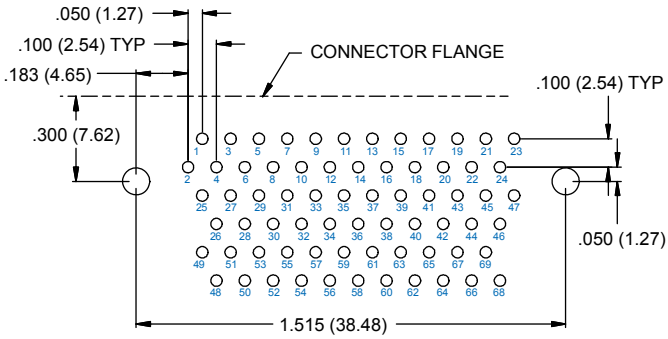

69 PIN

MICRO-D CBR Board Mount Connector PCB Layouts – Pin Connectors

Patterns shown are for connector mounting side of PC board. 9 Thru 69 Contacts .096 (2.44) Diameter Mounting Holes, 75-130 Pin .125 (3.18) Diameter

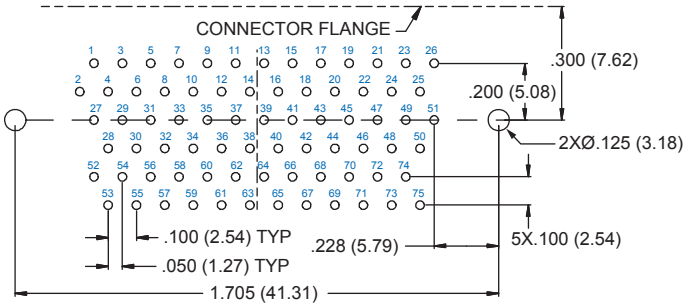

75 PIN

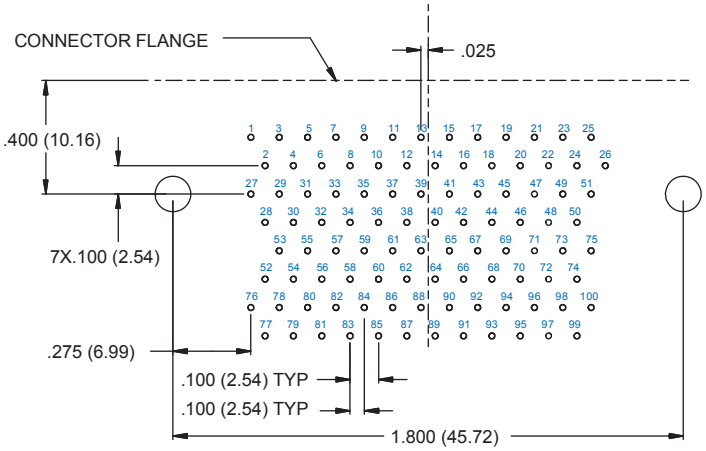

100 PIN

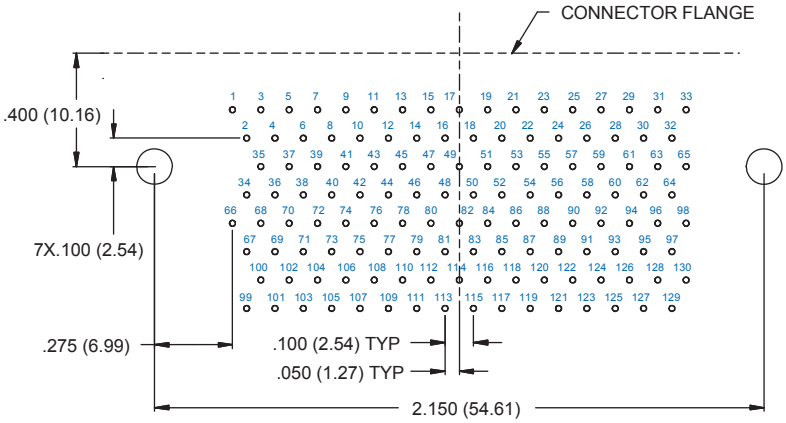

130 PIN

Micro-D MWDM-CBR
Right Angle Thru-Hole
Printed Circuit Board Connectors

MICRO-D CBR Board Mount Connector PCB Layouts – Socket Connectors

Patterns shown are for connector mounting side of PC board. 9 Thru 69 Contacts .096 (2.44) Diameter Mounting Holes, 75-130 Pin .125 (3.18) Diameter

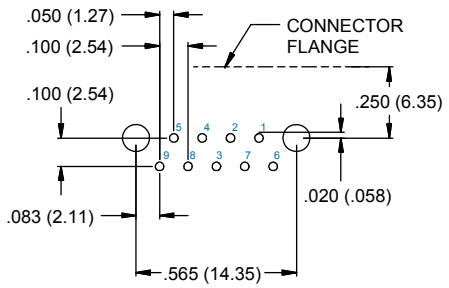

9 SOCKET

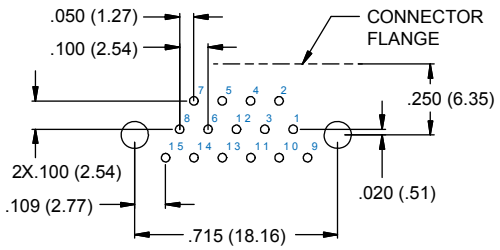

15 SOCKET

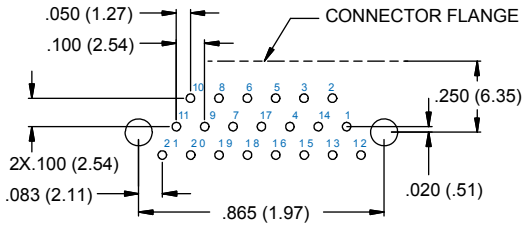

21 SOCKET

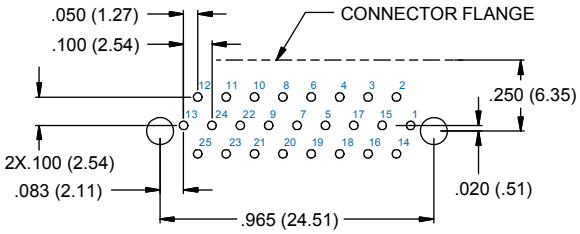

25 SOCKET

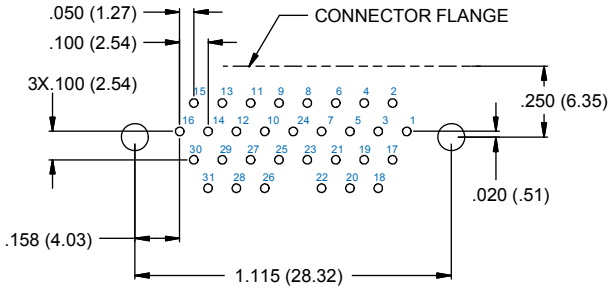

31 SOCKET

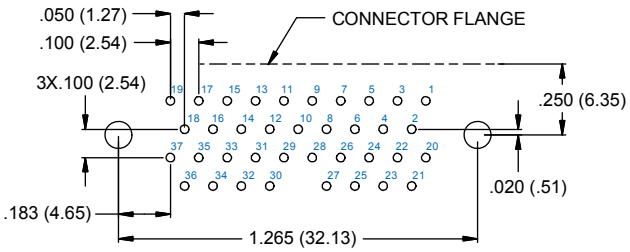

37 SOCKET

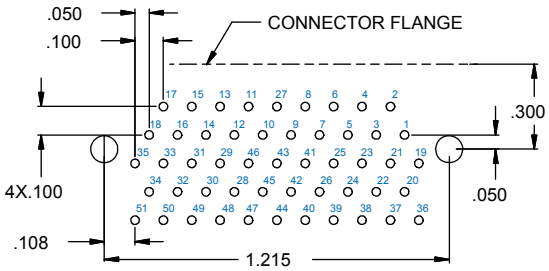

51 SOCKET

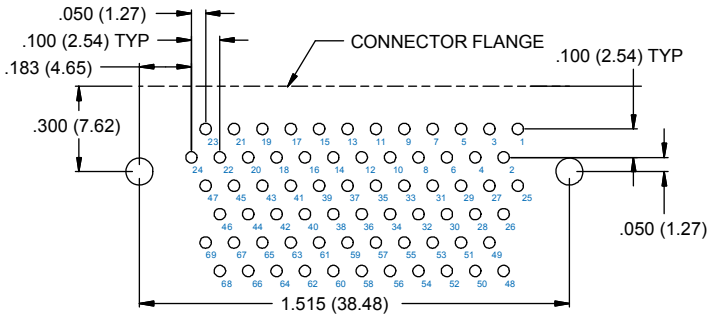

69 SOCKET

© 2013 Glenair, Inc.

GLENAIR, INC. • 1211 AIR WAY • GLENDALE, CA 91201-2497 • 818-247-6000 • FAX 818-500-9912
www.glenair.com E-Mail: sales@glenair.com

MICRO-D CBR Board Mount Connector PCB Layouts – Socket Connectors

Patterns shown are for connector mounting side of PC board. 9 Thru 69 Contacts .096 (2.44) Diameter Mounting Holes, 75-130 Pin .125 (3.18) Diameter

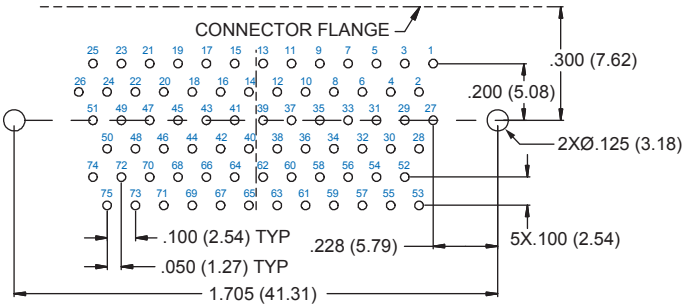

75 SOCKET

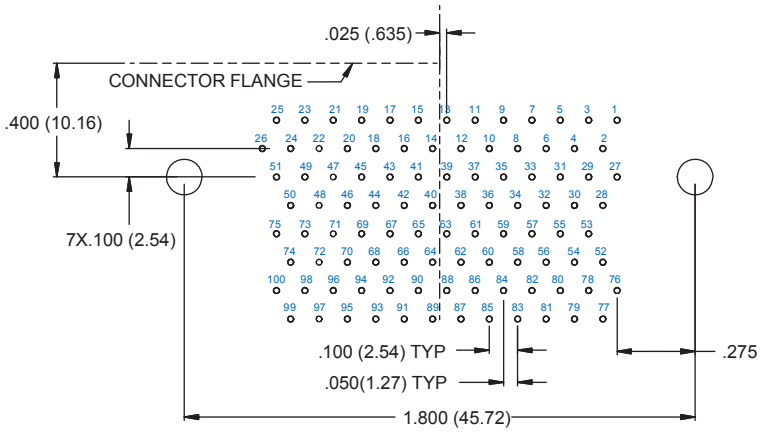

100 SOCKET

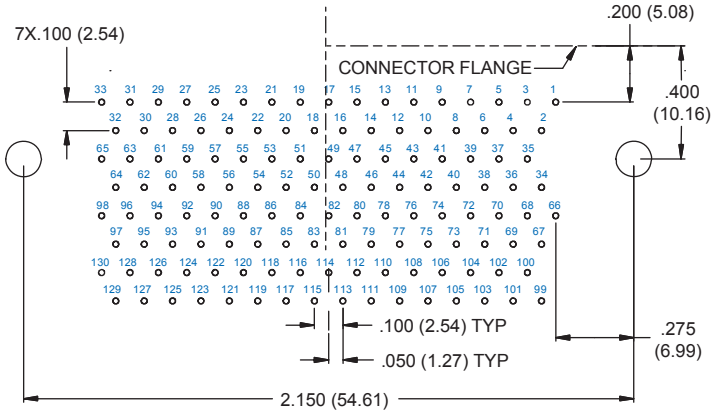

130 SOCKET