THIS DRAWING IS UNPUBLISHED. RELEASED FOR PUBLICATION -.-
© COPYRIGHT - BY TYCO ELECTRONICS CORPORATION. ALL RIGHTS RESERVED.

LOC	DIST
AD	00

REVISIONS

P	LTR	DESCRIPTION	DATE	DWN	APVD
	C1	REV PER ECO-10-000443	16JAN10	KK	AEG
	D	ECR-10-019054	15SEP10	DP	MQW
	E	ECO-11-024491	13DEC11	SY	MQW
	F	ECR-12-010544	06NOV12	SY	AC

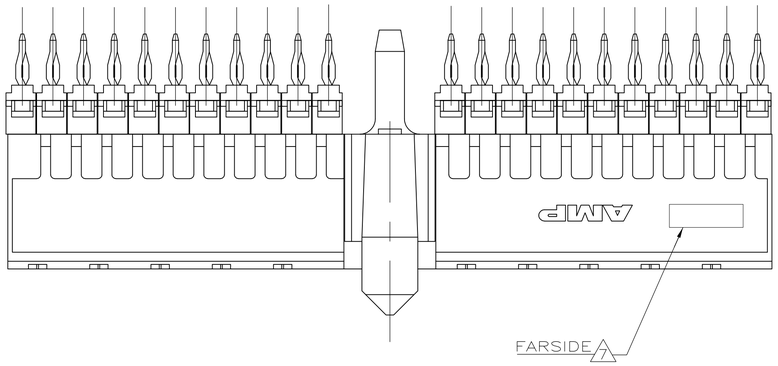

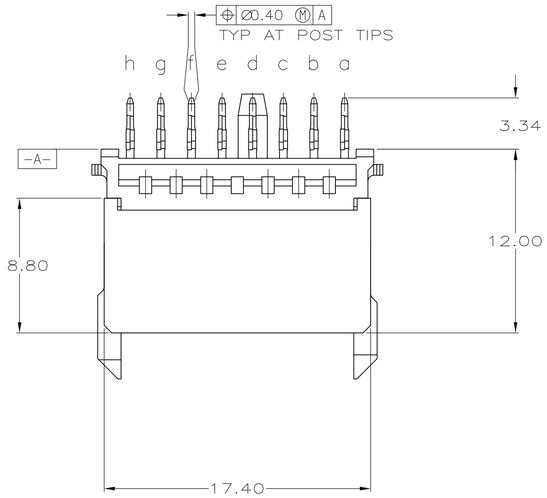

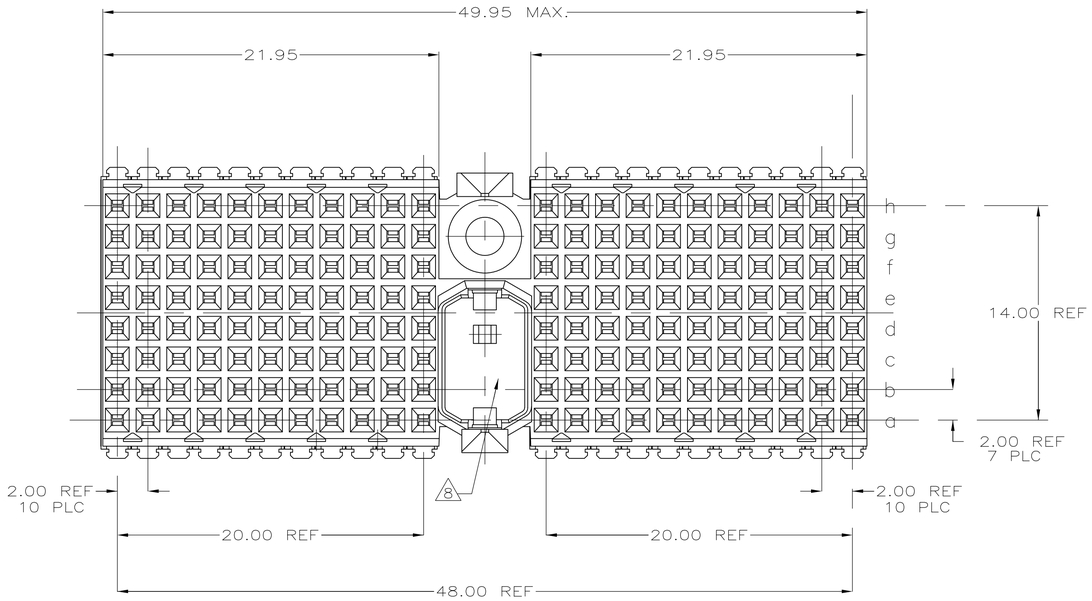

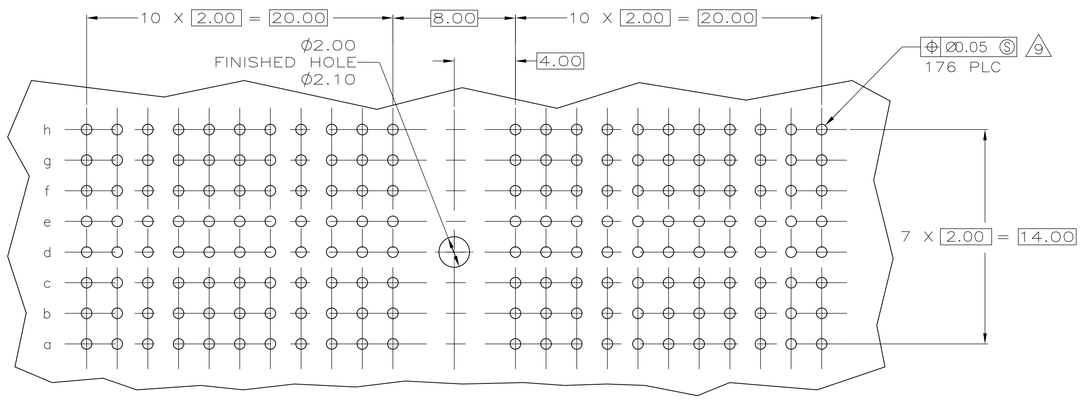

RECOMMENDED PCB HOLE LAYOUT
COMPONENT SIDE SHOWN

1. MATERIAL:
   CONTACT: PHOSPHOR BRONZE.
   HOUSING: GLASS-FILLED POLYESTER.
2. GENERAL PLATING SPECIFICATION: UNDERPLATING (ENTIRE CONTACT): 1.27µm MIN NICKEL AND ACTION PIN: 0.5µm MIN TIN\LEAD.
   FOR PLATING OF MATING SURFACES SEE APPLICABLE SPECIFICATION REFERENCE FOR EACH DASH NUMBER.
3. CONFORMS TO ALL TESTING ACCORDING TO IEC 61076-4-101 PERFORMANCE LEVEL 2.
4. CONFORMS TO ALL TESTING ACCORDING TO IEC 61076-4-101 PERFORMANCE LEVEL 1.
5. CONNECTOR TESTED AND QUALIFIED AGAINST TELCORDIA GR-1217-CORE QUALITY LEVEL 3, CENTRAL OFFICE APPLICATIONS.
6. CONNECTOR TESTED AND QUALIFIED AGAINST TELCORDIA GR-1217-CORE QUALITY LEVEL 3, UNCONTROLLED ENVIROMENT APPLICATIONS.
7. CONNECTOR MARKED WITH PART NUMBER AND DATE CODE. ADDITIONAL CHARACTERS OR MARKINGS, AS WELL AS THE LOCATION OF THE MARKINGS, MAY BE ADDED FOR TRACEABILITY BASED UPON MANUFACTURERS DISCRETION.
8. AREA RESERVED FOR KEYING PART (BASIC P.N. 100526).
9. PLATED-THROUGH HOLES AT 2x2mm SQUARE GRID 176 HOLES.
10. CONNECTOR LUBRICATED WITH BELCORE APPROVED LUBRICANT, TECHNICAL REFERENCE: TR-NWT-001217 ISSUE 1, SEP 1992.
11. OBSOLETE PARTS: OBSOLETE CIS STREAMLINING PER D.RENAUD/D.SINISI

PLATED THRU HOLES PARAMETERS
REFERENCE APPLICATION SPECIFICATION

11	OBSOLETE	2 6 10	~~1-646538-9~~
	OBSOLETE	2 5 10	~~646538-9~~
11	OBSOLETE	2 4	~~646538-4~~
		2 3	646538-1
		FINISH	PART NUMBER

THIS DRAWING IS A CONTROLLED DOCUMENT.

DIMENSIONS: mm

TOLERANCES UNLESS OTHERWISE SPECIFIED:
0 PLC ± -
1 PLC ± -
2 PLC ± 0.13 ±0.2
3 PLC ± -
4 PLC ± -
ANGLES ± 4°

MATERIAL 1

FINISH SEE TABLE

DWN B.CARBO	06DEC05	Tyco Electronics Corporation, Harrisburg, PA 17105-3608
CHK G.SKIPPER	06DEC05	
APVD G.SKIPPER	06DEC05	NAME: RECEPTACLE ASSEMBLY, VERTICAL, 176 POSN., TYPE D, 8 ROW, Z-PACK 2mm HM
PRODUCT SPEC 108-1622		
APPLICATION SPEC 114-19029		
WEIGHT —		SIZE A1 · CAGE CODE 00779 · DRAWING NO C-646538 · RESTRICTED TO —
CUSTOMER DRAWING		SCALE 5:1 · SHEET 1 OF 1 · REV F