DATE	DESCRIPTION	REV.

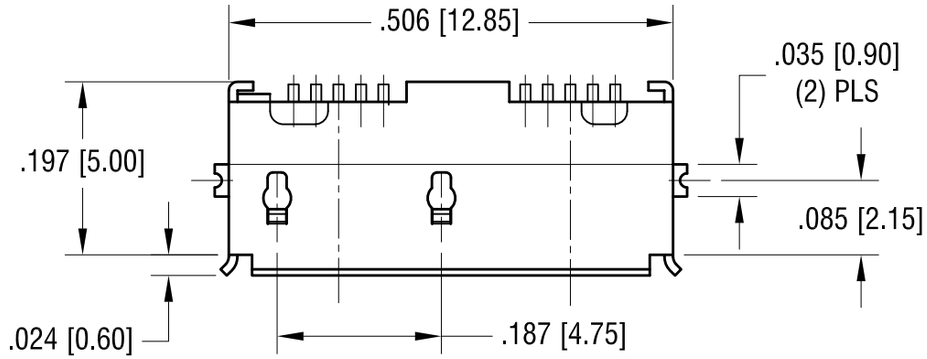

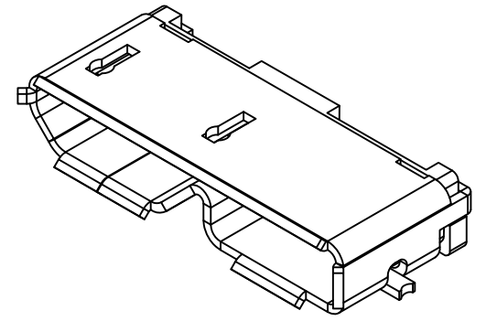

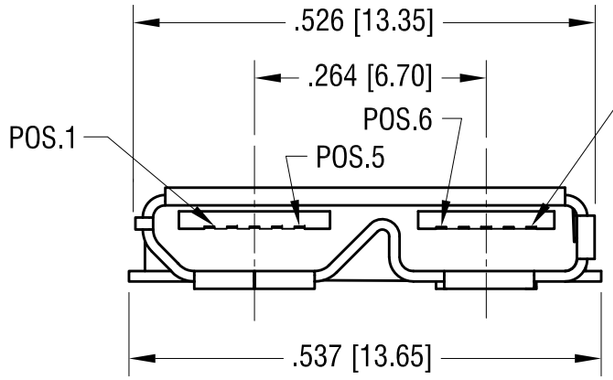

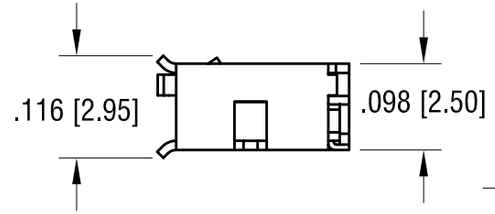

PCB LAYOUT

TOLERANCE ±.002 [±0.05]

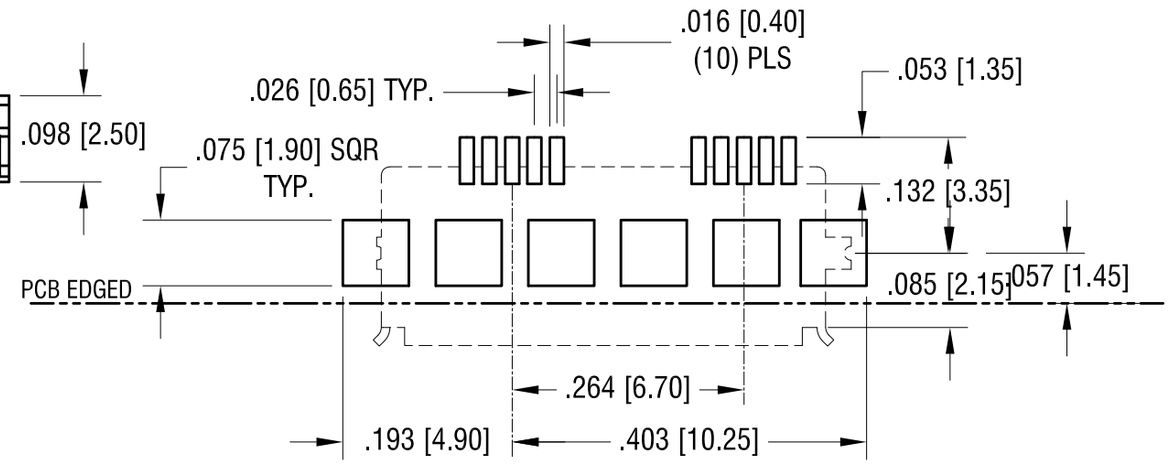

PLUG SPECIFICATIONS:

SHELL: MAT'L- STEEL
FINISH- NICKEL PLATE
CONTACT: MAT'L- PHOSPHOR BRONZE
FINISH- GOLD FLASH OVER NICKEL
INSULATION: MAT'L- THERMOPLASTIC, UL 94V-0

ELECTRICAL CHARACTERISTICS:

RATED VOLTAGE: 30V (RMS)
CONTACT CURRENT RATING: 1 Amp DC MAX.
CONTACT RESISTANCE: 15m Ω min.
DIELECTRIC WITHSTANDING VOLTAGE: 750V AC FOR 1 MINUTE

MECHANICAL CHARACTERISTICS:

OPERATING TEMPERATURE: -13°F (-25°C) TO 176°F (+80°C)
DURABILITY: 1500 CYCLES MIN.

THIS DOCUMENT IS THE PROPERTY OF KEYSTONE ELECTRONICS CORP. AND SHALL NOT BE REPRODUCED, DISTRIBUTED OR USED AS A BASIS FOR MANUFACTURE WITHOUT PRIOR WRITTEN PERMISSION FROM KEYSTONE ELECTRONICS CORP.

KEYSTONE ELECTRONICS CORP.
www.keyelco.com • ASTORIA, N.Y. 11105-2017 • Tel (718) 956-8900

PART NAME	USB 3.0 MICRO RECEPTACLE		
MATERIAL	AS NOTED		
FINISH	AS NOTED	DRN BY NT	DATE 4.20.10
		APP'D LN	SCALE 4X
TOLERANCES INCH [MM] DECIMAL ± .004 [± 0.10] ANGULAR ± 1° UNLESS OTHERWISE SPECIFIED	CODE C/M	DWG NO. 955	