THIS DRAWING IS UNPUBLISHED. RELEASED FOR PUBLICATION - , - .
© COPYRIGHT - By - ALL RIGHTS RESERVED.

LOC	DIST
GP	00

REVISIONS

P	LTR	DESCRIPTION	DATE	DWN	APVD
	L1	REVISED PER ECO-11-004835	11MAR11	RK	HMR

1. POLYESTER, UL 94V-0 RATED, BLACK.
2. CARBON STEEL.
3. 5.08um [.000200] MIN TIN OVER 2.54um [.000100] MIN COPPER.
4. GOLD FLASH FOR A LENGTH OF 2.54[.100] MIN FROM MATING END, 2.54um [.000100] MIN TIN OR TIN-LEAD ON OPPOSITE END, BOTH OVER 1.27um [.000050] MIN NICKEL.
5. 0.76um [.000030] MIN GOLD FOR A LENGTH OF 2.54 [.100] MIN FROM MATING END, 2.54um [.000100] MIN TIN OR TIN-LEAD ON OPPOSITE END, BOTH OVER 1.27um [.000050] MIN NICKEL.
6. NOTE DELETED.
7. DATUMS AND BASIC DIMENSIONS ESTABLISHED BY CUSTOMER.
8. 2.79[.110] MAX IN SHELL TAB CLINCH AREAS.
9. OBSOLETE PART NUMBER.
10. SUPSD BY 747299-2.
11. SUPSD BY 1-747299-6.

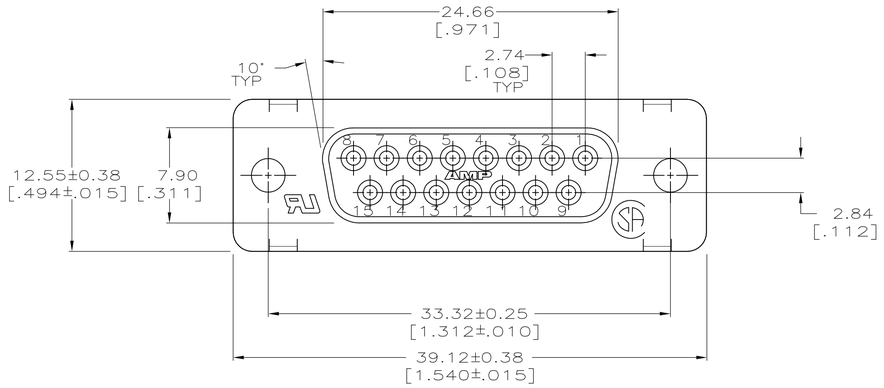

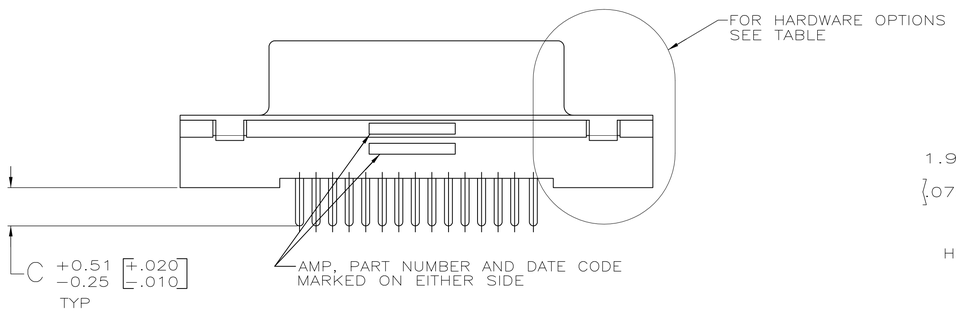

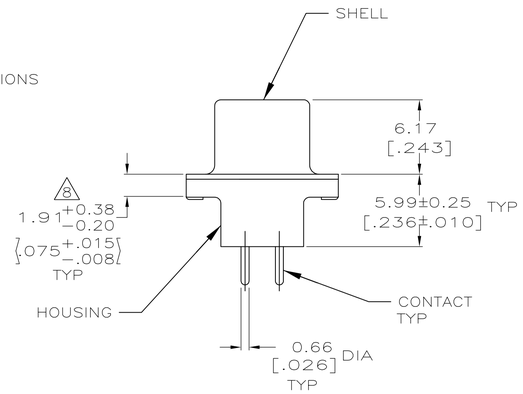

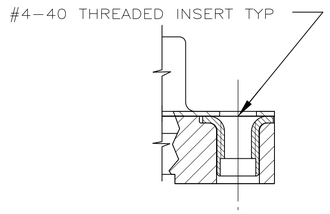

DETAIL D

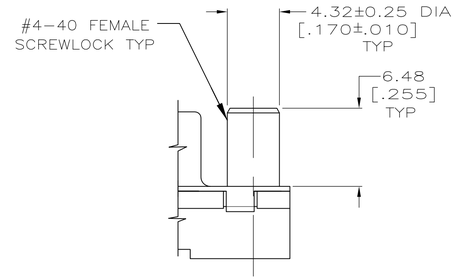

DETAIL E

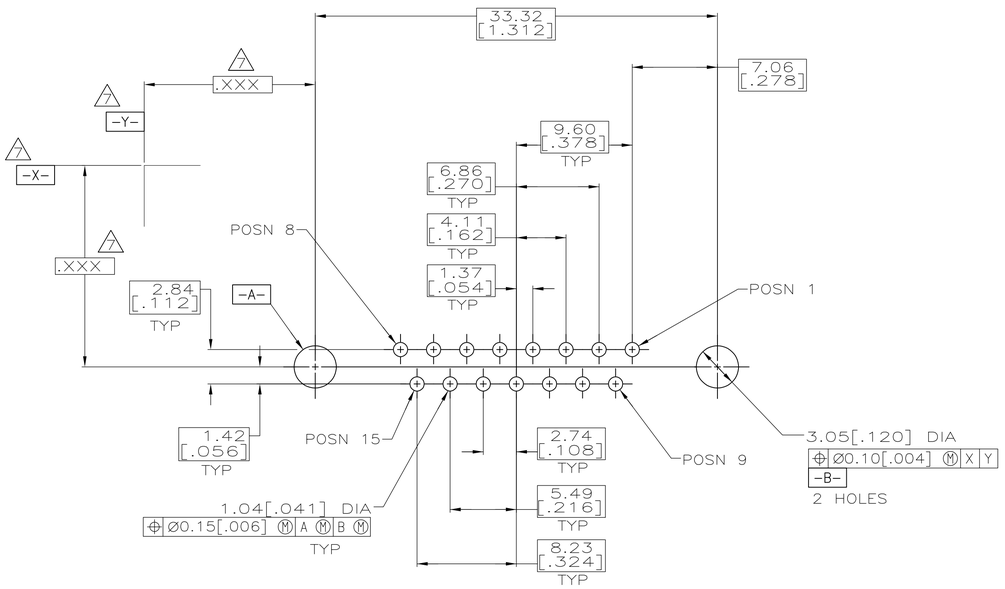

RECOMMENDED PC BOARD MOUNTING DIMENSIONS

W/FEMALE SCREWLOCKS PER DETAIL E	5	4.32 [.170]	11 1-747299-6
	4	4.32 [.170]	1-747299-5
	5	3.18 [.125]	1-747299-4
	4	3.18 [.125]	9 1-747299-3
W/THREADED INSERTS PER DETAIL D	5	4.32 [.170]	9 1-747299-0
	5	3.18 [.125]	747299-8
	4	3.18 [.125]	747299-7
WO/FEMALE SCREWLOCKS OR THREADED INSERTS AS SHOWN	5	6.35 [.250]	9 747299-6
	5	4.32 [.170]	747299-4
	5	3.18 [.125]	747299-2
	4	3.18 [.125]	10 747299-1
HARDWARE OPTIONS	CONTACTS / FINISH	C	PART NO

THIS DRAWING IS A CONTROLLED DOCUMENT.

DIMENSIONS: mm[INCHES]

TOLERANCES UNLESS OTHERWISE SPECIFIED:
0 PLC ± -
1 PLC ± -
2 PLC ± 0.13 [.005]
3 PLC ± -
4 PLC ± -
ANGLES ± -

MATERIAL 1 2

FINISH 3

DWN D BROCKWAY 3-22-93
CHK R STONE 5-10-93
APVD -

TE Connectivity

NAME: RECEPTACLE ASSEMBLY, SIZE 2, 15 POSITION, FRONT METAL SHELL, WITH OR WITHOUT SCREWLOCKS OR INSERTS,

PRODUCT SPEC 108-40025
APPLICATION SPEC 114-40023
WEIGHT -

SIZE	CAGE CODE	DRAWING NO	RESTRICTED TO
A1	00779	C-747299	-

CUSTOMER DRAWING

SCALE 4:1 SHEET 1 OF 1 REV L1

4805 (3/11)