THIS DRAWING IS UNPUBLISHED. RELEASED FOR PUBLICATION 20
© COPYRIGHT 20 BY - ALL RIGHTS RESERVED.

REVISIONS

P	LTR	DESCRIPTION	DATE	DWN	APVD
	B1	REVISED PER ECO-15-010004	11JUL2015	NK	MZ
	C	REVISED PER ECO-17-004650	05APR2017	BDA	MZ

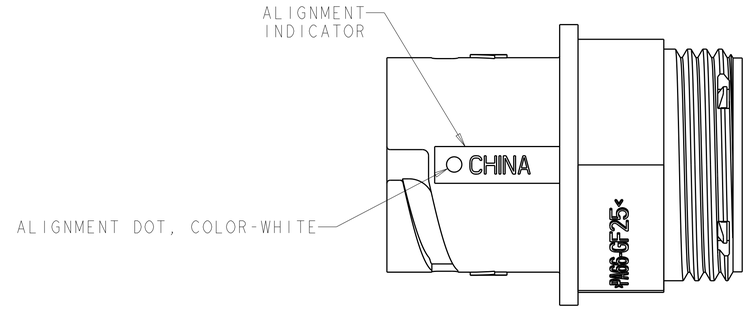

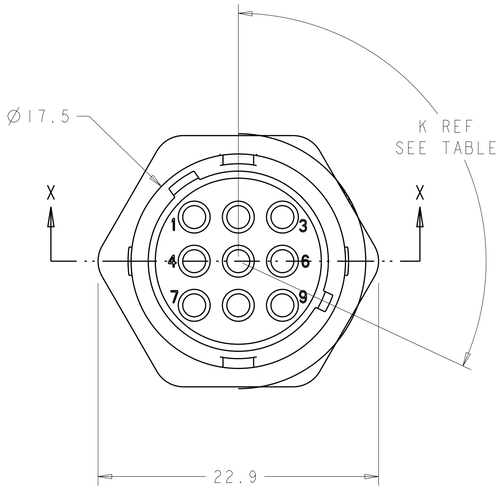

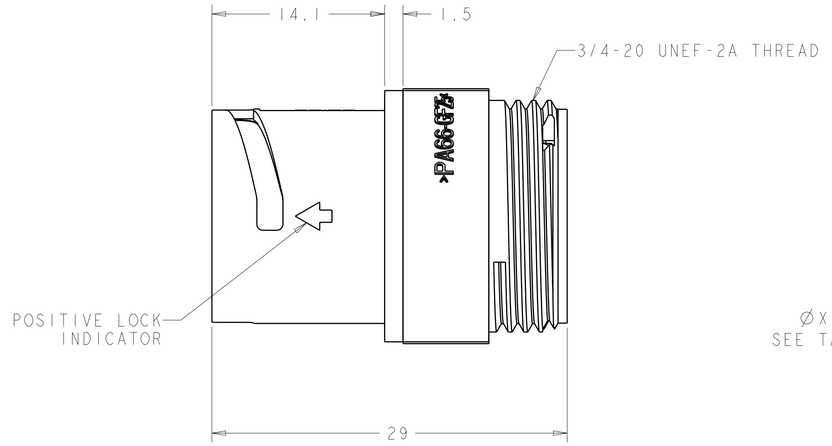

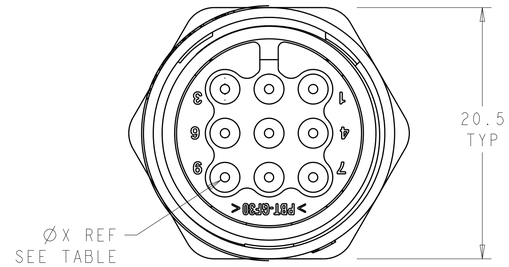

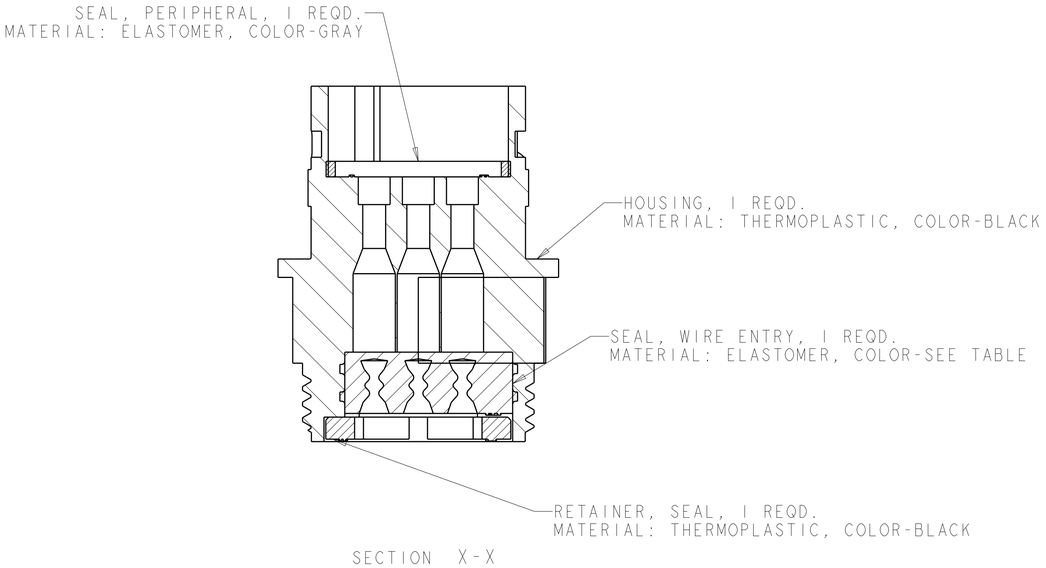

SECTION X-X

	SEAL, WIRE ENTRY COLOR	ØX REF	K REF	PART NUMBER
OBSOLETE	YELLOW	Ø0.75	135°	1445825-04
	NATURAL	Ø1.5	115°	1445825-03
OBSOLETE	NATURAL	Ø1.5	135°	1445825-02
	YELLOW	Ø0.75	115°	1445825-01

THIS DRAWING IS A CONTROLLED DOCUMENT.

DIMENSIONS: mm

TOLERANCES UNLESS OTHERWISE SPECIFIED:
0 PLC ±-
1 PLC ±-
2 PLC ±0.13
3 PLC ±-
4 PLC ±-
ANGLES ±-

MATERIAL: SEE CALLOUT
FINISH: - / -

DWN SHANE WIEST 22OCT2001
CHK G DOUTY 22OCT2001
APVD H WAKEEM 13JUN2003
PRODUCT SPEC -
APPLICATION SPEC -
WEIGHT -

TE Connectivity

NAME: ASSEMBLY, SIZE 11, 9 POSITION. FREE HANGING, SEALED, MINI CPC

SIZE	CAGE CODE	DRAWING NO	RESTRICTED TO
A1	00779	C-1445825	-

Customer Drawing | SCALE 4:1 | SHEET 1 OF 1 | REV C

4805 (3/13)