THIS DRAWING IS UNPUBLISHED. RELEASED FOR PUBLICATION -.- .
© COPYRIGHT - By - ALL RIGHTS RESERVED.

LOC	DIST
GP	00

REVISIONS

P	LTR	DESCRIPTION	DATE	DWN	APVD
	A1	REVISED PER ECO-11-004835	11MAR11	RK	HMR

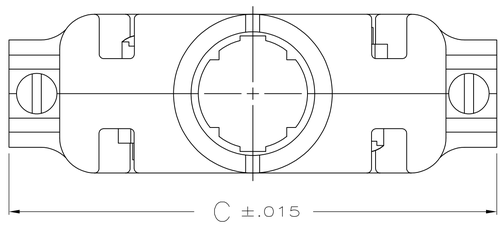

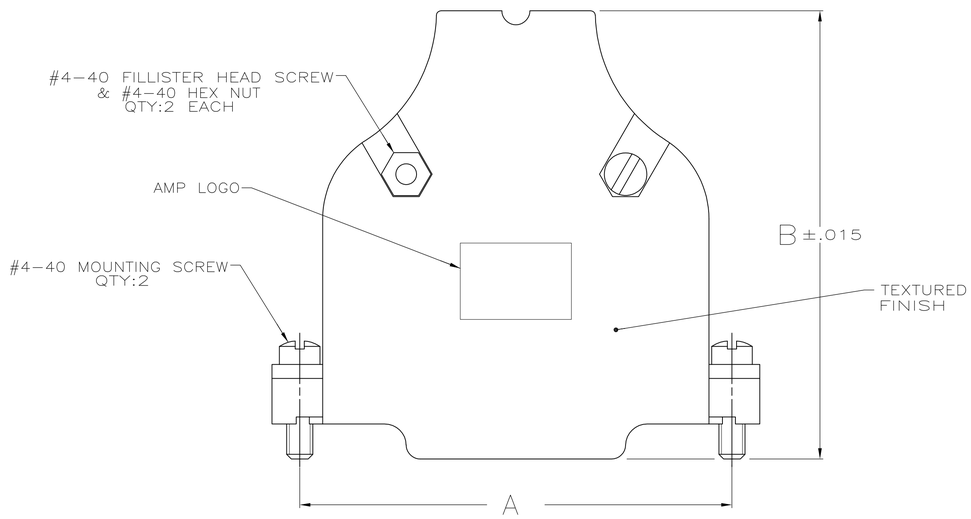

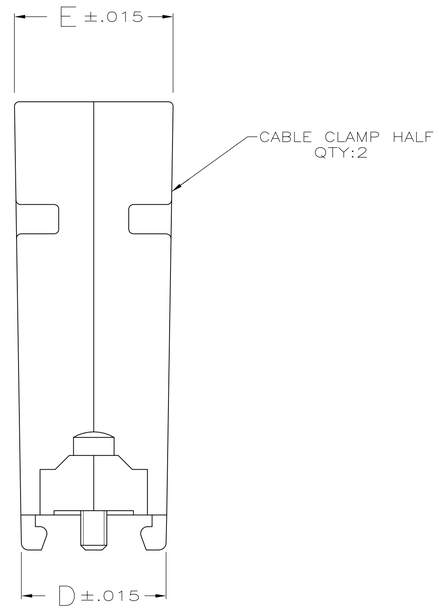

1. PARTS PACKAGED UNASSEMBLED AS A UNIT KIT.
2. CABLE CLAMP HALVES: ZINC ALLOY, FILLISTER HEAD SCREWS, HEX NUTS & MOUNTING SCREWS: STEEL
   GROMMETS: FLEXIBLE PVC, UL 94V-0 RATED, COLOR: BLACK.
3. CABLE CLAMP HALVES: NICKEL OVER COPPER, FILLISTER HEAD SCREWS, HEX NUTS & MOUNTING SCREWS: ZINC PLATED .000200-.000400 THICK, CLEAR CHROMATE COATING.
4. OBSOLETE

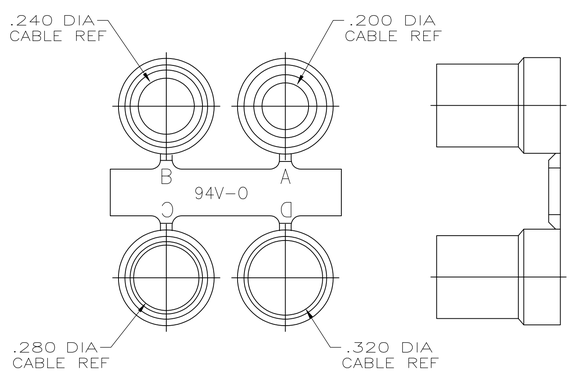

GROMMET ASSORTMENT
FOR SIZES 1 & 2 ONLY

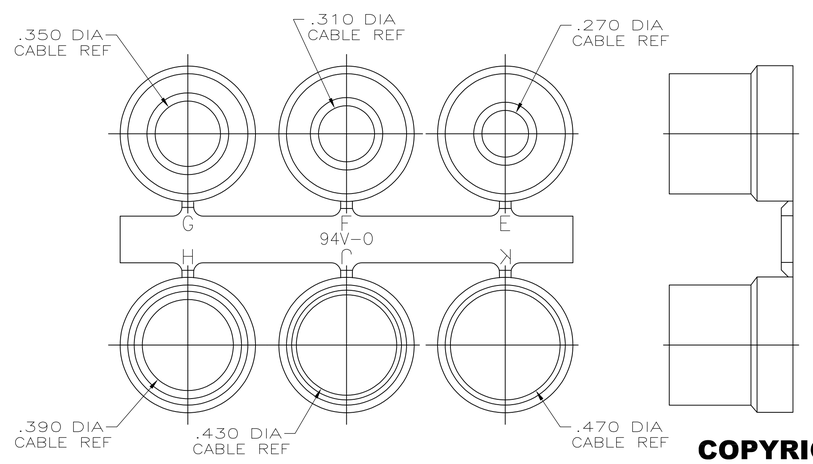

GROMMET ASSORTMENT
FOR SIZES 3, 4 & 5 ONLY

	BULK PACK	STANDARD	STANDARD	STANDARD	STANDARD	STANDARD	STANDARD
	.680	.900	.800	.680	.620	.620	.550
	.620	.730	.620	.620	.620	.620	.620
	2.090	2.644	2.738	2.090	1.545	1.215	
	1.920	1.920	1.920	1.920	1.910	1.910	1.910
	1.852	2.406	2.500	1.852	1.312	.984	
	3	5	4	3	2	1	
	5748676-9	5748676-5	5748676-4	5748676-3	5748676-2	5748676-1	
PACKAGING	E	D	C	B	A	SIZE	PART NO.

COPYRIGHT 2005
TE CONNECTIVITY CORP
ALL RIGHTS RESERVED

THIS DRAWING IS A CONTROLLED DOCUMENT.

DIMENSIONS: INCHES

TOLERANCES UNLESS OTHERWISE SPECIFIED:
0 PLC ± -
1 PLC ± -
2 PLC ± -
3 PLC ± .005
4 PLC ± -
ANGLES ± -

MATERIAL 2
FINISH 3

DWN D. HENNY 8-17-05
CHK C. ROHDE 8-17-05
APVD M. WALMSLEY 8-17-05
PRODUCT SPEC —
APPLICATION SPEC —
WEIGHT —

TE Connectivity

NAME KIT, CABLE CLAMP, 180 DEG EXIT, W/GROMMETS, AMPLIMITE SERIES
—

SIZE	CAGE CODE	DRAWING NO	RESTRICTED TO
A1	00779	C-5748676	—

CUSTOMER DRAWING SCALE 1:1 SHEET 1 OF 1 REV A1

5748676

4805 (3/11)