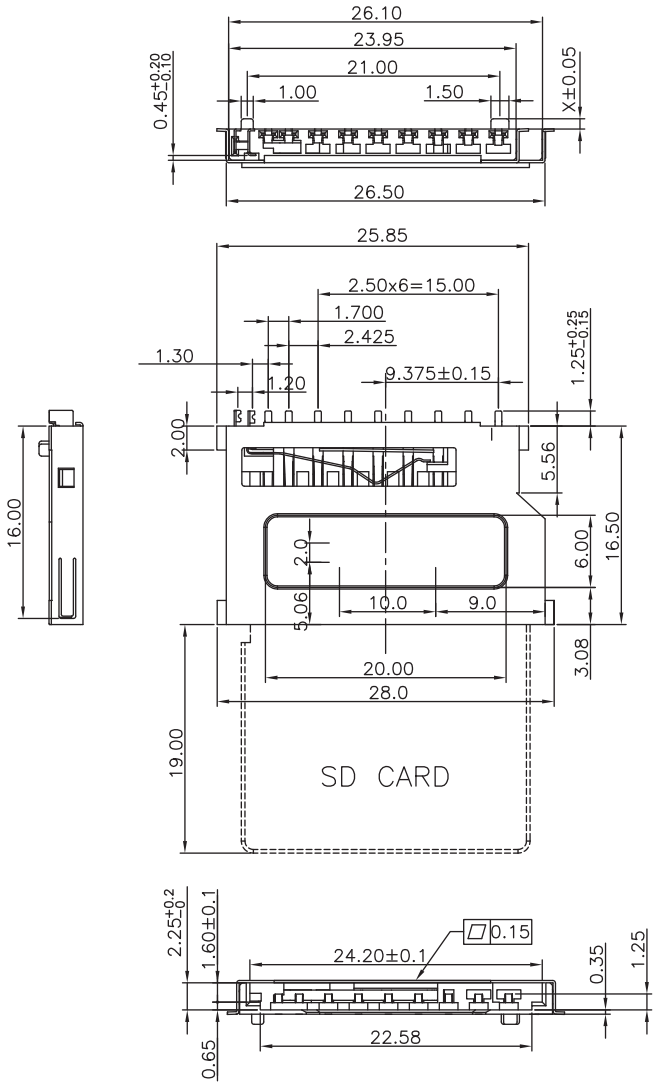

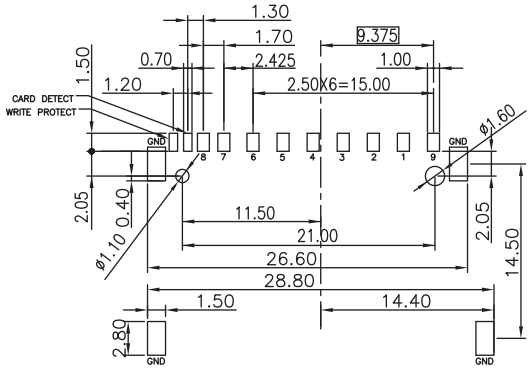

RECOMMENDED P.C.B LAYOUT
TOLERANCES: ±0.05mn

TECHNICAL CHARACTERISTICS

MATERIAL
INSULATOR: PA9T
FLAMABILITY RATING: UL94-V0
COLOR: BLACK
CONTACT MATERIAL: COPPER ALLOY
CONTACT TYPE: STAMPED
CONTACT PLATING: SELECTIVE GOLD
SHIELDING: COPPER ALLOY
SHIELDING PLATING:NICKEL
QUALITY CLASS: 10000 MATING CYCLES

ENVIRONMENTAL
OPERATING TEMPERATURE: -25 UP TO 85°C
COMPLIANCE: LEAD FREE AND ROHS

ELECTRICAL
CURRENT RATING: 0.5A
WORKING VOLTAGE: 100VAC
INSULATOR RESISTANCE: >1000 MOHM
DIELECTRIC WITHSTANDING VOLTAGE: 500VAC/MN
CONTACT RESISTANCE: 100 mOHM MAX

SOLDERING
REFLOW PROCESS ONLY

PACKAGING
TAPE & REEL

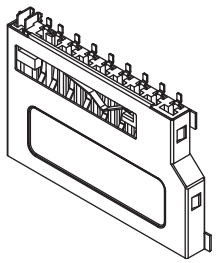

RoHS Compliant

REV	DATE	FILE	BY
D	07-MAR-12	PAGE 2 SWITCH	GG
C	22-FEB-12	PAGE 2	GG
B	16-FEB-12	TKP	GG
A	11-AUG-31	PDF	GG

PROJECTION:

APPROVAL: RJ

GENERAL TOLERANCE
.X = +/- 0.2
.XX = +/- 0.15

UNIT: MM
SCALE:
SHEET: 1/3
DRAW: VICKY

WÜRTH ELEKTRONIK

DESCRIPTION: SD Card Connector - Push & Pull - Short Type With Card Detection - 9 pins

WERI PART NO: 693 063 020 911

SIZE **A4**

Contact OFF

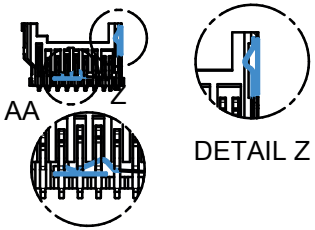

Contact ON / LOCK OFF

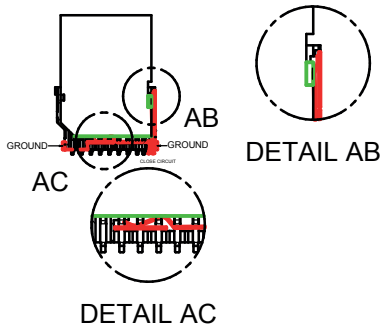

Contact ON / LOCK ON

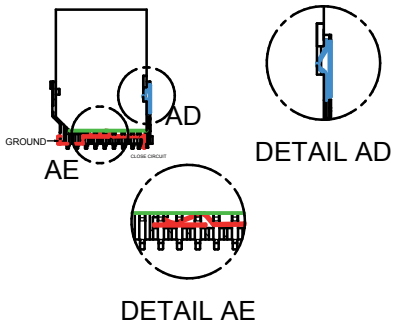

Card detection switch		Write protection switch		
Card removed	Card inserted	Card removed	Card inserted	
			Write Protect	Write enable
OPEN	CLOSE	OPEN	OPEN	CLOSE

RoHS Compliant

REV	DATE	FILE	BY

PROJECTION:

GENERAL TOLERANCE
.X = +/_ 0.2
.XX = +/_ 0.15

WÜRTH ELEKTRONIK

APPROVAL: RJ

UNIT: MM
SCALE:
SHEET: 2/3
DRAW: VICKY

DESCRIPTION: SD Card Connector - Push & Pull - Short Type With Card Detection - 9 pins

WERI PART NO: 693 063 020 911

SIZE **A4**

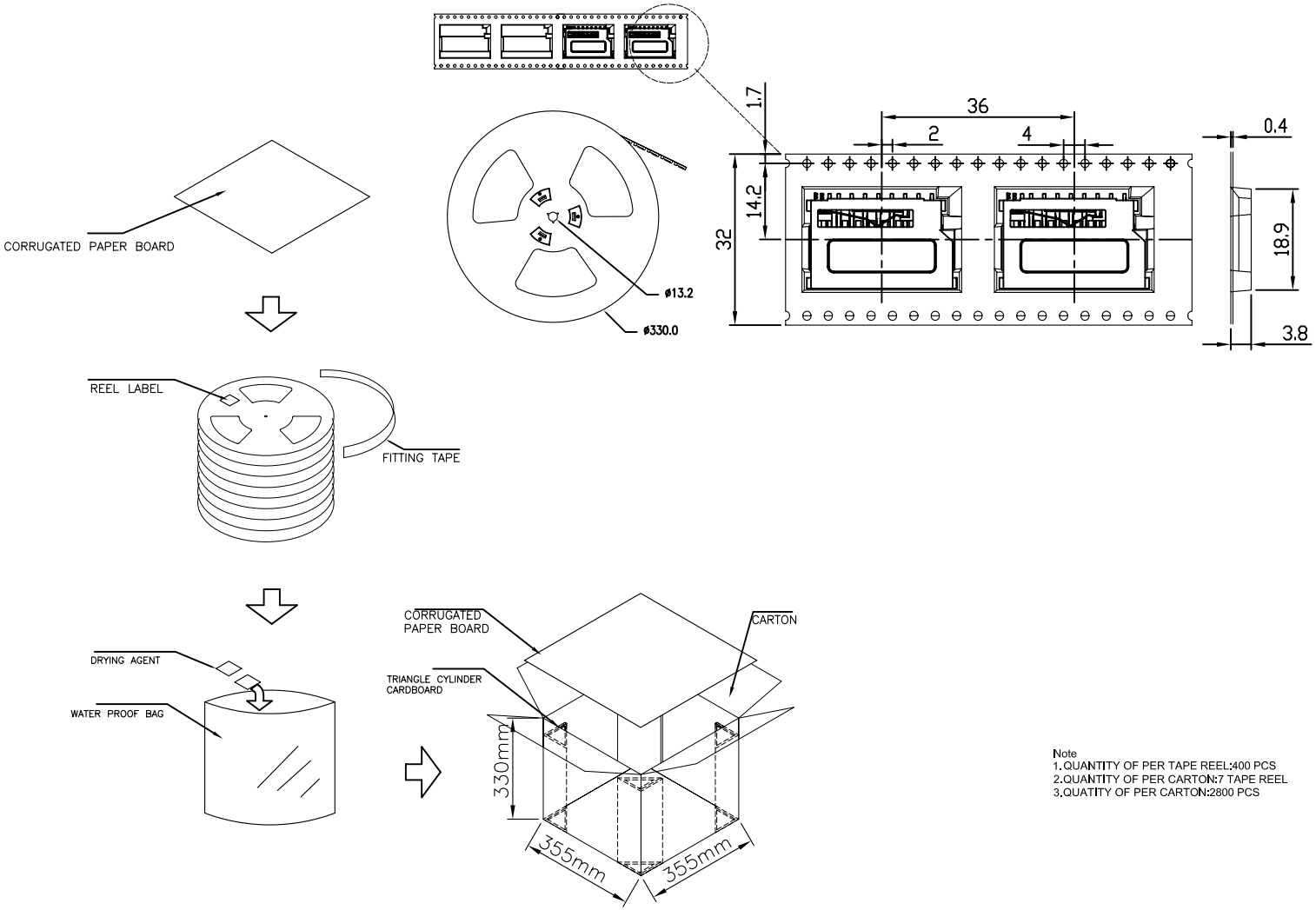

Note
1.QUANTITY OF PER TAPE REEL:400 PCS
2.QUANTITY OF PER CARTON:7 TAPE REEL
3.QUATITY OF PER CARTON:2800 PCS

RoHS Compliant

REV	DATE	FILE	BY

PROJECTION:

GENERAL TOLERANCE
.X = +/_ 0.2
.XX = +/_ 0.15

WÜRTH ELEKTRONIK

APPROVAL: RJ

UNIT: MM
SCALE:
SHEET: 3/3
DRAW: VICKY

DESCRIPTION: SD Card Connector - Push & Pull - Short Type With Card Detection - 9 pins

WERI PART NO: 693 063 020 911

SIZE **A4**