THIS DRAWING IS UNPUBLISHED. RELEASED FOR PUBLICATION 20
© COPYRIGHT 20 BY - ALL RIGHTS RESERVED.

REVISIONS

| P | LTR | DESCRIPTION | DATE | DWN | APVD |
|---|---|---|---|---|---|
| | J2 | REVISED PER ECR-17-017609 | 04DEC2017 | JB | DZ |

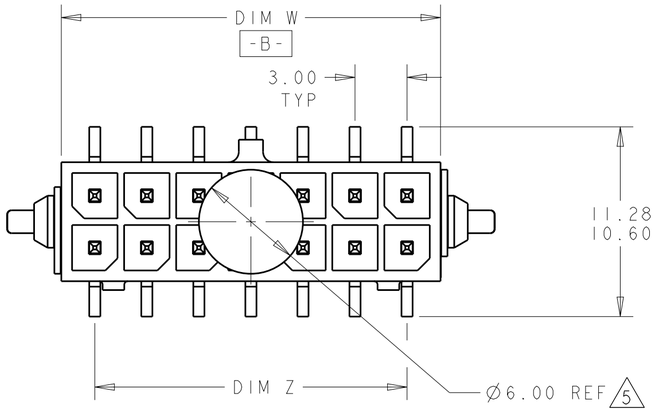


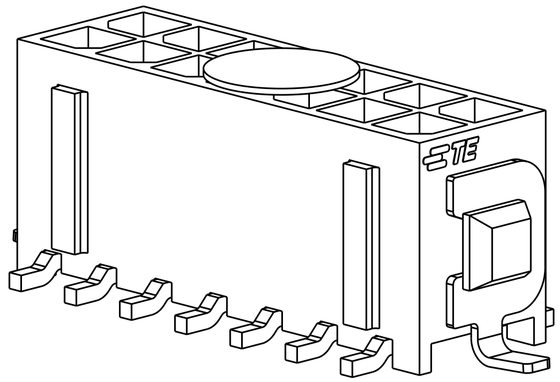

SCALE 6:1

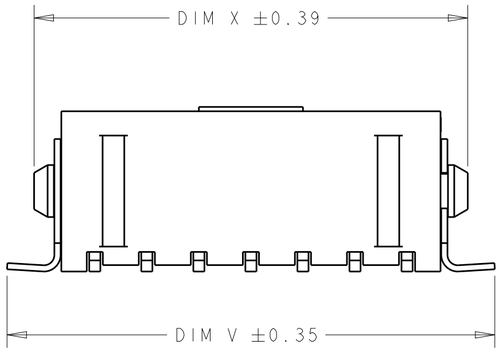


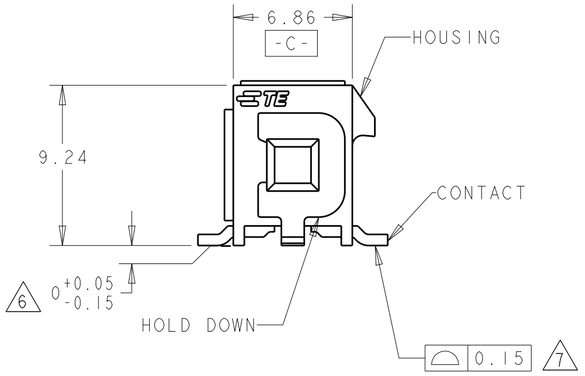


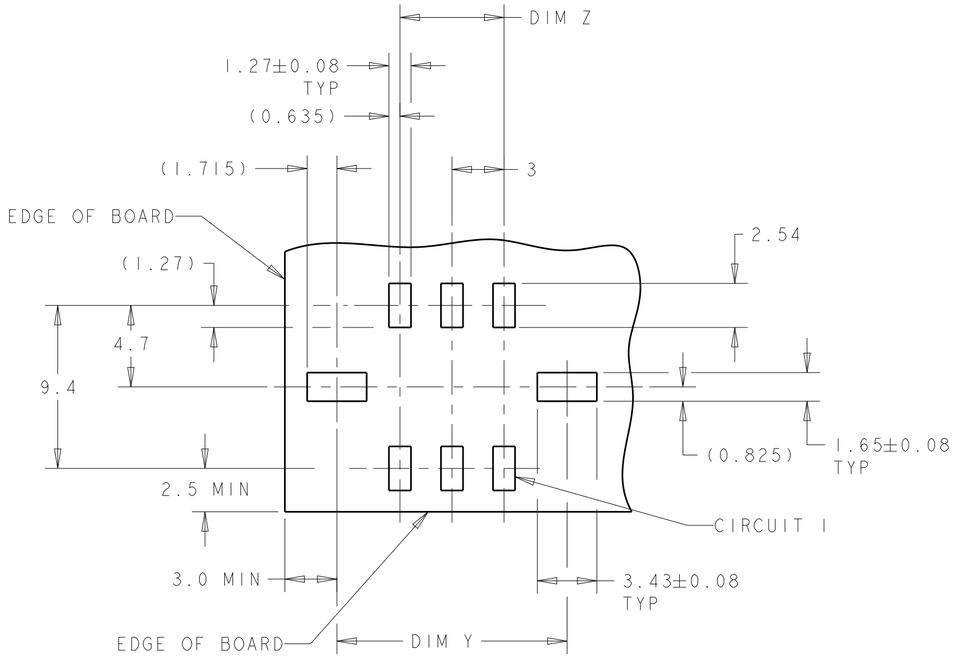


RECOMMENDED PCB LAYOUT 4
(COMPONENT SIDE)

1 MATERIAL:
CONTACTS - BRASS.
HOUSING - UL 94V-0 RATED HIGH TEMP NYLON, COLOR; BLACK.
HOLD DOWNS - PHOSPHOR BRONZE.

2 FINISH:
CONTACTS - 2.54µm MINIMUM TIN-LEAD OVER 1.27µm MINIMUM NICKEL.
HOLD DOWNS - 2.54µm TIN LEAD.

4 RECOMMENDED PC BOARD THICKNESS OF 1.57.

5 KAPTON VACUUM PICK UP BUTTON.

6 DIMENSION APPLIES TO SOLDERTAIL SURFACES AND STANDOFF SURFACES.

7 ALL SOLDERTAILS AND HOLD DOWNS.

8 FINISH:
CONTACTS - 2.54µm MINIMUM MATTE TIN OVER 1.27µm MINIMUM NICKEL.
HOLD DOWNS - 2.54µm MATTE TIN.

| | FINISH | DIM V | DIM W | DIM Y | DIM Z | DIM X | NO. OF POSN. | ASSEMBLY |
|---|---|---|---|---|---|---|---|---|
| | 8 | 43.04 | 36.86 | 40.27 | 33.00 | 40.00 | 24 | 5-794636-4 |
| | | 40.04 | 33.86 | 37.27 | 30.00 | 37.00 | 22 | 5-794636-2 |
| | | 37.04 | 30.86 | 34.27 | 27.00 | 34.00 | 20 | 5-794636-0 |
| | | 34.04 | 27.86 | 31.27 | 24.00 | 31.00 | 18 | 4-794636-8 |
| | | 31.04 | 24.86 | 28.27 | 21.00 | 28.00 | 16 | 4-794636-6 |
| | | 28.04 | 21.86 | 25.27 | 18.00 | 25.00 | 14 | 4-794636-4 |
| | | 25.04 | 18.86 | 22.27 | 15.00 | 22.00 | 12 | 4-794636-2 |
| | | 22.04 | 15.86 | 19.27 | 12.00 | 19.00 | 10 | 4-794636-0 |
| | | 19.04 | 12.86 | 16.27 | 9.00 | 16.00 | 8 | 3-794636-8 |
| | | 16.04 | 9.86 | 13.27 | 6.00 | 13.00 | 6 | 3-794636-6 |
| | | 13.04 | 6.86 | 10.27 | 3.00 | 10.00 | 4 | 3-794636-4 |
| | | 10.04 | 3.86 | 7.27 | - | 7.00 | 2 | 3-794636-2 |
| SUPERSEDED BY 5-794636-4 | 2 | 43.04 | 36.86 | 40.27 | 33.00 | 40.00 | 24 | ~~2-794636-4~~ |
| SUPERSEDED BY 5-794636-2 | | 40.04 | 33.86 | 37.27 | 30.00 | 37.00 | 22 | ~~2-794636-2~~ |
| SUPERSEDED BY 5-794636-0 | | 37.04 | 30.86 | 34.27 | 27.00 | 34.00 | 20 | ~~2-794636-0~~ |
| SUPERSEDED BY 4-794636-8 | | 34.04 | 27.86 | 31.27 | 24.00 | 31.00 | 18 | ~~1-794636-8~~ |
| SUPERSEDED BY 4-794636-6 | | 31.04 | 24.86 | 28.27 | 21.00 | 28.00 | 16 | ~~1-794636-6~~ |
| SUPERSEDED BY 4-794636-4 | | 28.04 | 21.86 | 25.27 | 18.00 | 25.00 | 14 | ~~1-794636-4~~ |
| SUPERSEDED BY 4-794636-2 | | 25.04 | 18.86 | 22.27 | 15.00 | 22.00 | 12 | ~~1-794636-2~~ |
| SUPERSEDED BY 4-794636-0 | | 22.04 | 15.86 | 19.27 | 12.00 | 19.00 | 10 | ~~1-794636-0~~ |
| SUPERSEDED BY 3-794636-8 | | 19.04 | 12.86 | 16.27 | 9.00 | 16.00 | 8 | ~~794636-8~~ |
| SUPERSEDED BY 3-794636-6 | | 16.04 | 9.86 | 13.27 | 6.00 | 13.00 | 6 | ~~794636-6~~ |
| SUPERSEDED BY 3-794636-4 | | 13.04 | 6.86 | 10.27 | 3.00 | 10.00 | 4 | ~~794636-4~~ |
| SUPERSEDED BY 3-794636-2 | | 10.04 | 3.86 | 7.27 | - | 7.00 | 2 | ~~794636-2~~ |

THIS DRAWING IS A CONTROLLED DOCUMENT.

DIMENSIONS: mm

TOLERANCES UNLESS OTHERWISE SPECIFIED:
0 PLC ±-
1 PLC ±-
2 PLC ±0.13
3 PLC ±-
4 PLC ±-
ANGLES ±

MATERIAL 1

FINISH SEE TABLE

DWN S. HOOVER 23-MAR-2005
CHK C. JONES 23-MAR-2005
APVD C. JONES 23-MAR-2005

PRODUCT SPEC -
APPLICATION SPEC -
WEIGHT -

TE Connectivity

NAME SURFACE MOUNT, VERTICAL, MECHANICAL HOLD DOWN, ASSEMBLY, TIN HEADER, DUAL ROW, MICRO MATE-N-LOK (TM)

SIZE A2 | CAGE CODE 00779 | DRAWING NO C-794636 | RESTRICTED TO -

CUSTOMER DRAWING | SCALE 4:1 | SHEET 1 OF 1 | REV J2

794636

1471-9 (3/13)