MA- Series

Three Phase Adjustable Trip Miniature Circuit Breakers/ Manual Motor Controllers

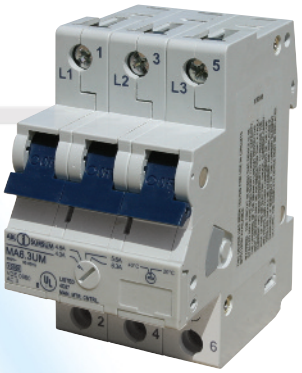

UL508 listed
E137938

CAN/CSA-C22.2 No.14 certified

The MA was designed to handle the high inrush loads of 3 phase transformers, power supplies, motors, etc. The MA protects wiring and equipment from damage caused by the three major classes of over-current, yet greatly reduces the number of nuisance trips in high starting and inrush current circuits.

An IEC device with excellent ratings under a UL listing at 480Y/277V (including group ratings) and at 500V under international standards, the Altech/ABL Sursum MA provides short and long term cost effective circuit protection for USA and/or export applications. The short term advantages include: (1) adjustable thermal trip allows finalization of initial designs before procurement of the load equipment is complete; (2) snap-on mounting for readily available, internationally standardized DIN Rail saves panel layout design time as well as installation and change labor; (3) large cage-clamp terminals with screws suitable to power screwdrivers, simplifies and speeds wiring; (4) convenient switched disconnect during factory testing and/or initial start-up saves time and aggravation. The key long term advantage is customer satisfaction and proven over-current protection of wiring and equipment (and the lack of rework/repair costs).

Type Designation

MA	16	U	M
(a)	**(b)**	**(c)**	**(d)**

(a) = MA - Manual Motor Controller
(b) = Rated Current
(c) = U - US Housing
= R - US Housing + Ring Tongue
(d) = M - Part No. Designation

Voltage Rating	480Y/277V AC
AIC (Interrupt Capacity)	0.16A-2.5A: 42kA; 4.0A-16A: 14kA; 20A-40A: 10kA
Standard Short Circuit Withstand Rating (UL/CSA Ratings)	0.16A-2.5A: 42kA; 4.0A-16A: 14kA
Group Short Circuit Ratings (UL/CSA Ratings)	see above
Typical Life	6000 on/off operations with 2xRC
Calibration Temperature	25°C, +0°, -5° (77°F, +0° -9°)
Standard Pack and Weight	1/450g (1.0 lb.)
Terminal Size Acceptability	Top/Bottom: 18-3 AWG
Terminal Torque (min/max)	2 Nm (17.7 lb.in.) / 2.5Nm (22.2 lb.in)

Cat. No.	Rated Current	FLA Dial Adjustment Markings	GROUP SHORT CIRCUIT RATING AT 480VAC[a] (and BCP size)	3Ø HORSEPOWER RATINGS AT NOMINAL LINE VOLTAGE (See Note for HEA Definition)				
				110-120V HP (HEA)	200V HP (HEA)	208V HP (HEA)	220-240V HP (HEA)	460-480V HP (HEA)
MA016UM	0.16A	0.1/ 0.12/0.14/0.16	42kA$_{RMS}$ symmetrical (max. 1200A MCCB or RK5)	Through MA2.5U, ampere rated for motor circuits having a full-load-amperage (FLA) not exceeding the MA's general purpose rated current (RC, equals maximum dial setting) and a locked rotor current not exceeding 6 times the MA's RC.				
MA025UM	0.25A	0.16/0.19/0.22/0.25						
MA040UM	0.40A	0.25/0.30/0.35/0.40						
MA063UM	0.63A	0.40/0.48/0.56/0.63						
MA1.0UM	1.0A	0.63/0.75/0.87/1.0						
MA1.6UM	1.6A	1.0/1.2/1.4/1.6						
MA2.5UM	2.5A	1.6/1.9/2.2/2.5						
MA4.0UM	4.0A	2.5/3.0/3.5/4.0	14kA$_{RMS}$ symmetrical (max. 350A MCCB or RK5)	1/2 (4.0)	3/4 (3.2)	3/4 (3.1)	1 (3.6)	2 (3.42)
MA6.3UM	6.3A	4.0/4.8/5.6/6.3		3/4 (5.6)	1 1/2 (6.0)	1 1/2 (5.7)	1 1/2 (5.2)	3 (4.8)
MA10UM	10A	6.3/7.5/8.7/10		1 (7.2)	2 (7.8)	2 (7.5)	3 (9.6)	5 (7.6)
MA16UM	16A	10/12/14/16		2 (13.6)	3 (11.0)	3 (10.6)	5 (15.2)	10 (14.0)
MA20UM	20A	16/17/18.5/20	10kA$_{RMS}$ symmetrical (max. 350A MCCB or RK5)	3 (19.2)	5 (17.5)	5 (16.7)	5 (15.2)	10 (14.0)
MA25UM	25A	20/21.5/23/25		3 (19.2)	5 (17.5)	7 1/2 (24.2)	7 1/2 (22.0)	15 (21.0)
MA32UM	32A	25/27/30/32		5 (30.4)	7 1/2 (25.0)	7 1/2 (24.2)	10 (28.0)	20 (27.0)
MA40UM	40A	32/34/37/40		5 (30.4)	10 (32.0)	10 (31.0)	10 (28.0)	25 (34.0)

Note: **HEA - Horsepower Equivalent Amperes**, the nominal amperage assigned to standard motor horsepower ratings in design guide tables such as NFPA-70 Tables 430-248, 430-249, 430-250; UL1077 Table 16.2; CSA - C22.2 No. 235-M89 Tables 44 and 45; CSA-C22.2 No. 14-M91 Table 19, etc. Multiply HEA values (in parenthesis) by 1.1 if power factor is 90%, and by 1.2 if power factor is 80%.

[a] The standard-circuit short-circuit rating is 14kA for all types. Group ratings can be used in a standard circuit (e.g., MA1.0U at 42kA), but a higher standard rating cannot be used in a group circuit (e.g., MA40U at 14kA only in standard circuit.)

Dimensions in mm

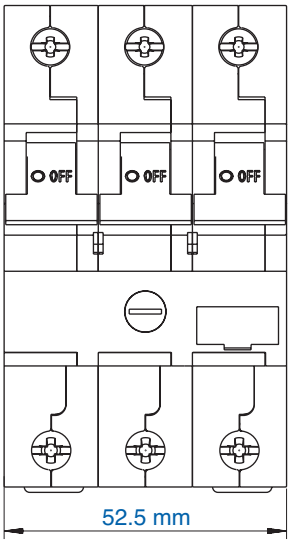

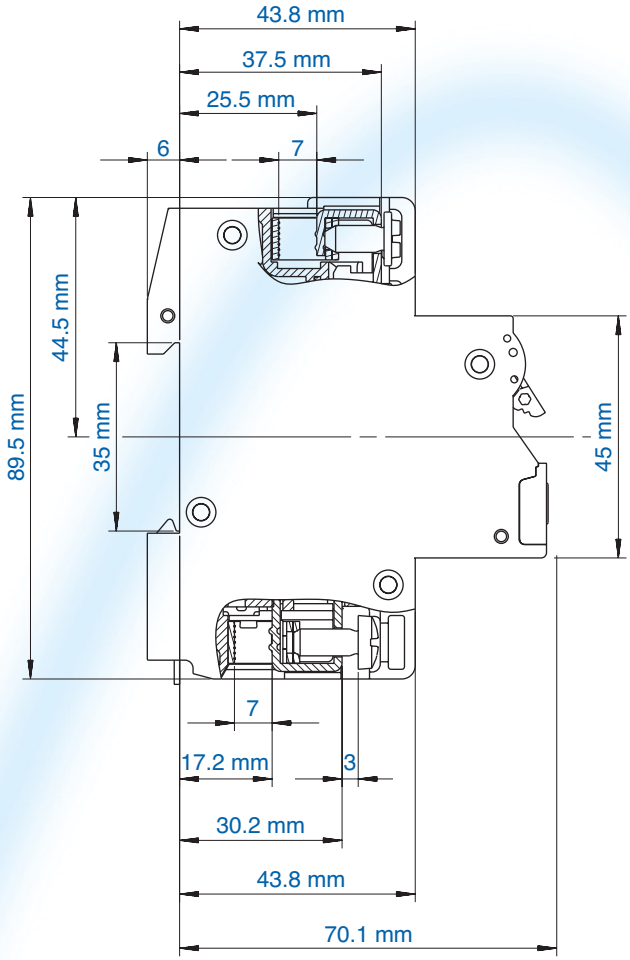

MA- Series Trip Curves

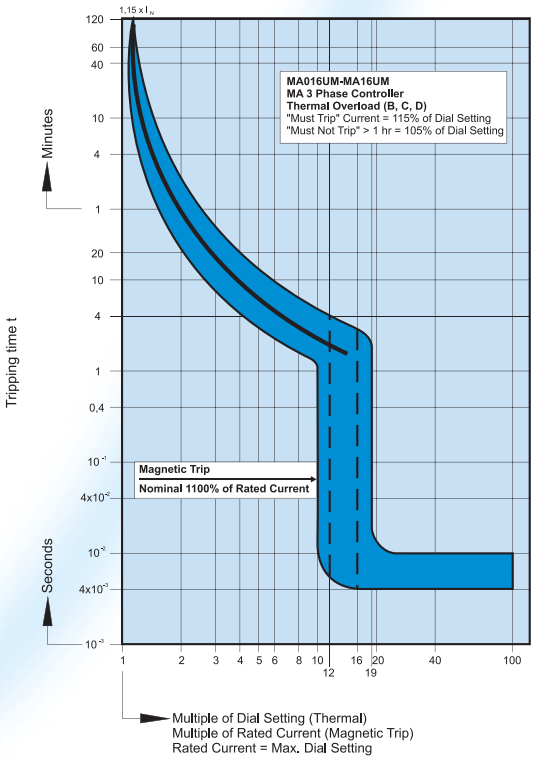

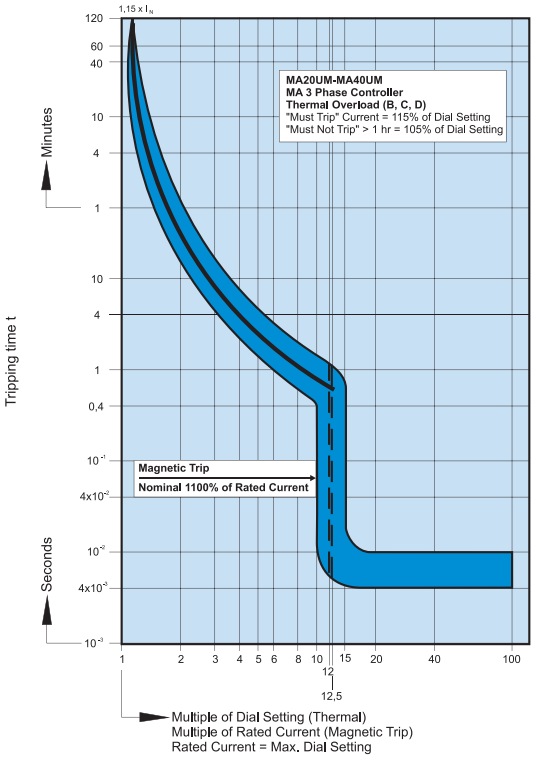

MA/USA Manual Motor Controller

UL508

V-EA and MA Accessories

For mounting instructions please refer to page 43.

UL Listed
E137938

Auxiliary Contact, Alarm Switch

Type/ Cat No.	Description	Contacts Type	Std Pk
H10UM	1 Auxiliary Contact	1NO	6
H11UM	2 Auxiliary Contacts	1NO + 1NC	6
H12UM	3 Auxiliary Contacts	1NO + 2NC	6
H21UM	3 Auxiliary Contacts	2NO + 1NC	6
HLS11M*	1 Auxiliary/1 Signal Contacts	1CO + 1CO (Signal)	6

Rated Operating Currents	10A@240V AC 3A@110V AC 1A@220V AC
Minimum Contact Load	1mA @ 24V DC
Torque	max. 0.8Nm (7 lb.in)
Wire Range:	
Single Wire	1.0mm² - 2.5mm² (18-14 AWG)
Stranded Wire	1.0mm² - 1.5mm² (18-16 AWG)
Stranded Wire with Ferrule	1.0mm² - 1.5mm² (18-16 AWG)

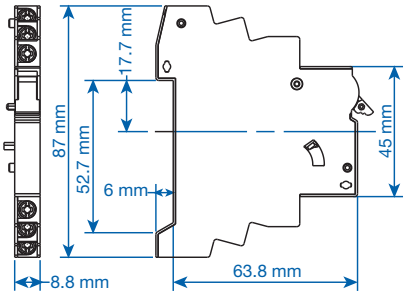

Dimensions HxxUM.

Shunt Trip

Type/ Cat No.	Description	Max. Operating Current @ Un	Std Pk
FA12UM	12V AC/DC	1.3A	5
FA24UM	24V AC/DC	0.6A	5
FA48UM	48 - 72V AC/DC	0.2A	5
FA110UM	110 - 240V AC/DC, 277V AC	0.25A @ 110V 0.5A @ 240V 0.58A @ 277V	5

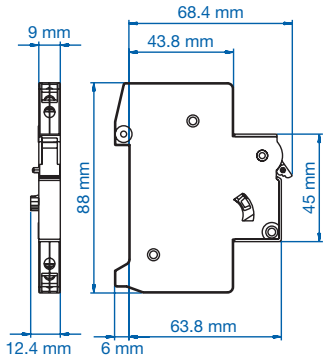

Dimensions HLS11M.

Undervoltage Trip*

Type/ Cat No.	Line Voltage V_E	Std Pk
UA120UM	120V AC, 60Hz	5

Reset-Hold Voltage = 0.85 x V_E
Drop-Out Voltage = 0.35 ~ 0.7 x V_E

V_E = Rated Voltage

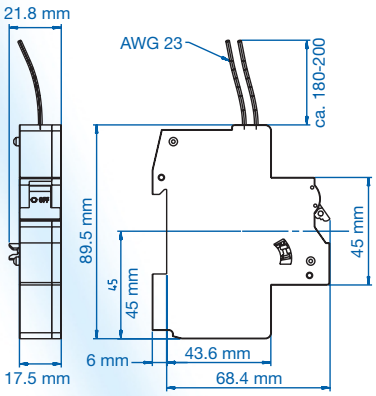

Dimensions UA120UM.

Neutral Pole

Type/ Cat No.	Rated Current In	Rated Voltage	Std Pk
N63UM	0.3 - 63A	480Y/277V AC	6

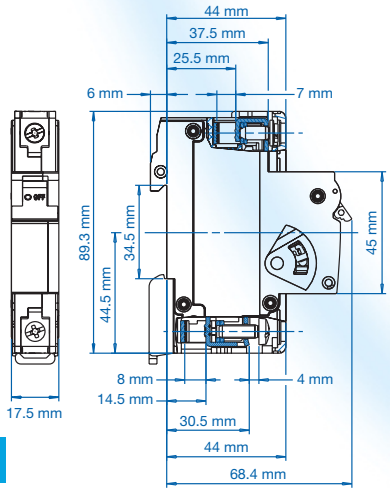

Dimensions N63UM, FAxxUM.

Touch Protection Caps

to cover the terminal screw holes on the switching devices, neutral Poles and shunt trips for increased touch protection.

Type/ Cat No.	Std Pk
BS.UL	100

Mounting Screw 34mm

to connect the auxiliary contact and shunt trip or neutral Pole to the circuit breaker.

Type/ Cat No.	Std Pk
E983419	10

Lock-out Adapter

Type/ Cat No.	Std Pk
EASS	10

* UL Pending

Cooling Spacer
Cat. No. 15.960

TEMPERATURE CORRECTION CURVE

Ambient Temperature and Adjacent Mounting/Loading Adjustment

(V-EA/MA Ambient Temperature - 25°C to 55°C, Storage Temperature -40°C to 70°C)

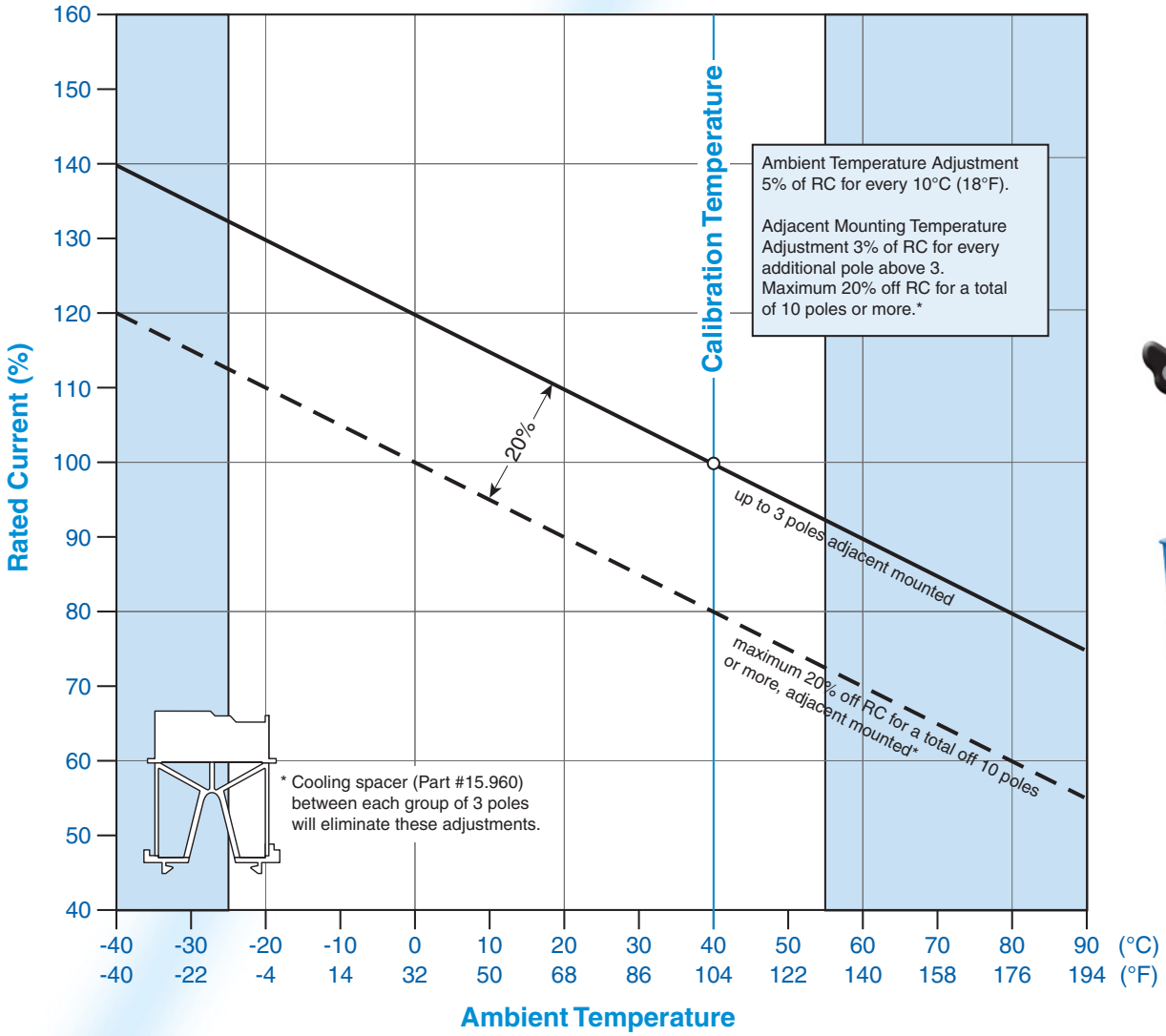

* V-EA and MA can also be locked in the on and off position by simply using a common lead or meter seal, which gets fed through the hole in the handle and a corresponding hole in the housing.