Alle Rechte vorbehalten/ *All rights reserved*

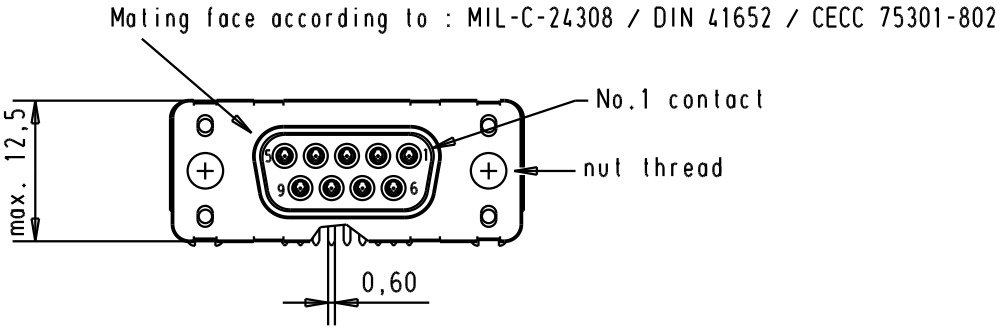

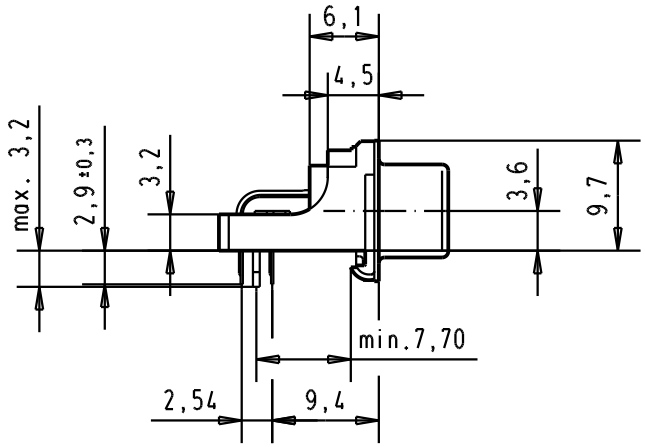

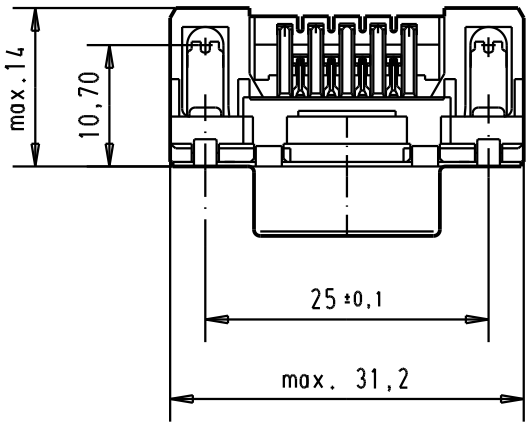

PCB layout hole
component side

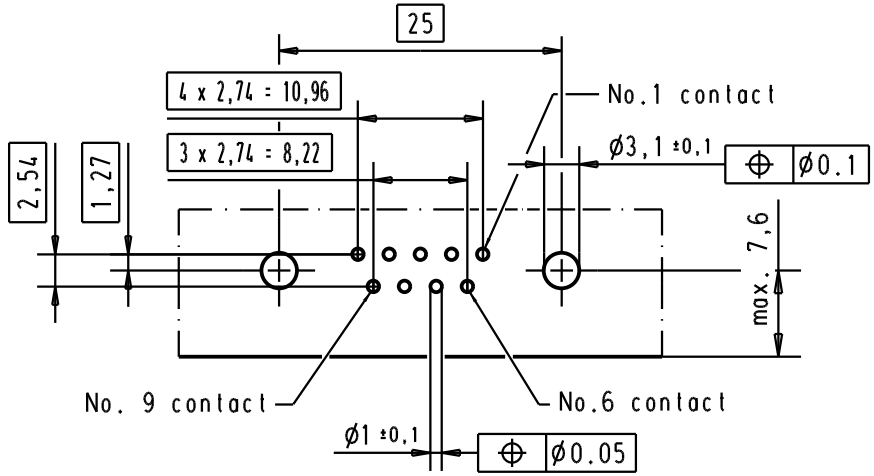

Connector retention and insertion forces on the PCB = 25 / 80 newtons

Part number	Nut thread	Performance level	Mod.	Dat.	Name
09 66 152 3615	M 3	1			
09 66 152 6615	M 3	2	31892	05/05/04	JH
09 66 152 7615	M 3	3	31084	04/SEP/02	YT
09 66 152 3616	4-40 UNC	1	27961	24/nov/00	jfb
09 66 152 6616	4-40 UNC	2	27952	26/oct/00	jfb
09 66 152 7616	4-40 UNC	3	27948	02/sept/00	jfb

	Dat.	Name
Detail.	02/sept/00	jfb
Insp.		
Stand.		

All Dim. in mm
Orig. Size DIN A 4

HARTING EURL
F-95972 Paris

D-Sub 09 poles low profil angle female,solder pin with nut and grounding board lock.

Maßstab/ *Scale* 1.5:1

TB 0966152x61x

Sub.

Blatt/ *Page* 2/5