THIS DRAWING IS UNPUBLISHED. RELEASED FOR PUBLICATION 20
© COPYRIGHT 20 BY - ALL RIGHTS RESERVED.

REVISIONS

P	LTR	DESCRIPTION	DATE	DWN	APVD
	J2	REVISED PER ECR-17-017609	04DEC2017	JB	DZ

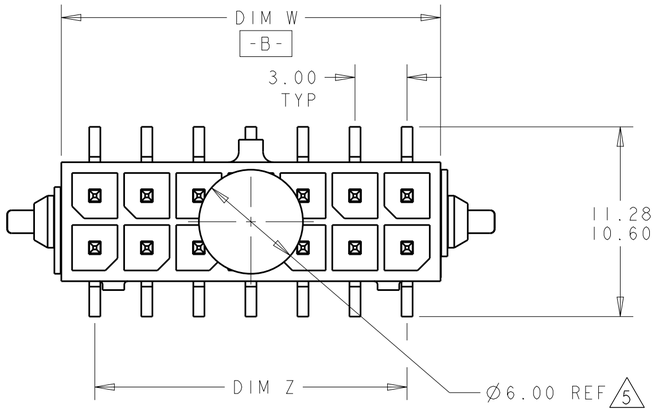

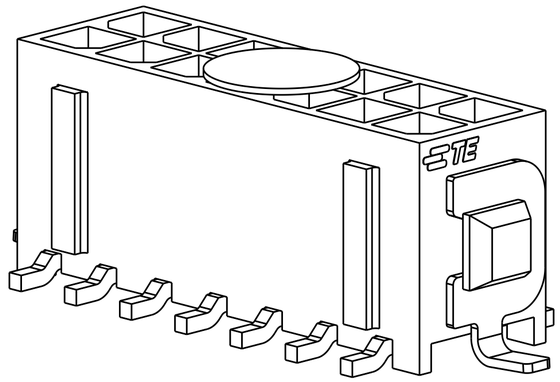

SCALE 6:1

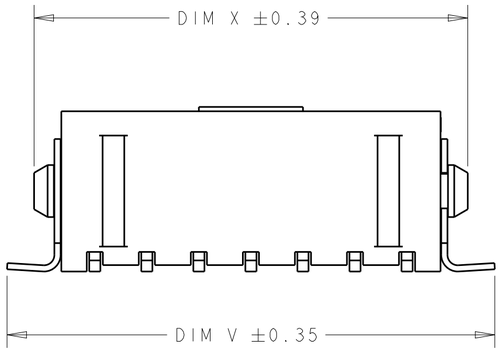

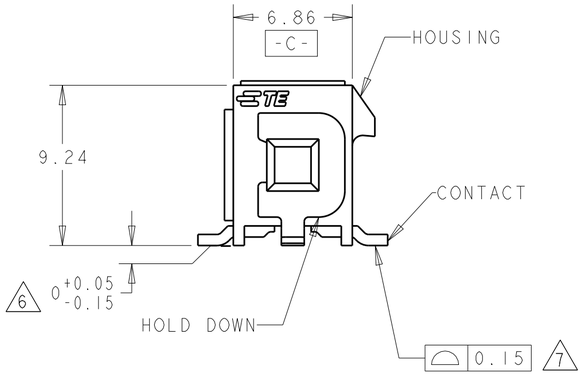

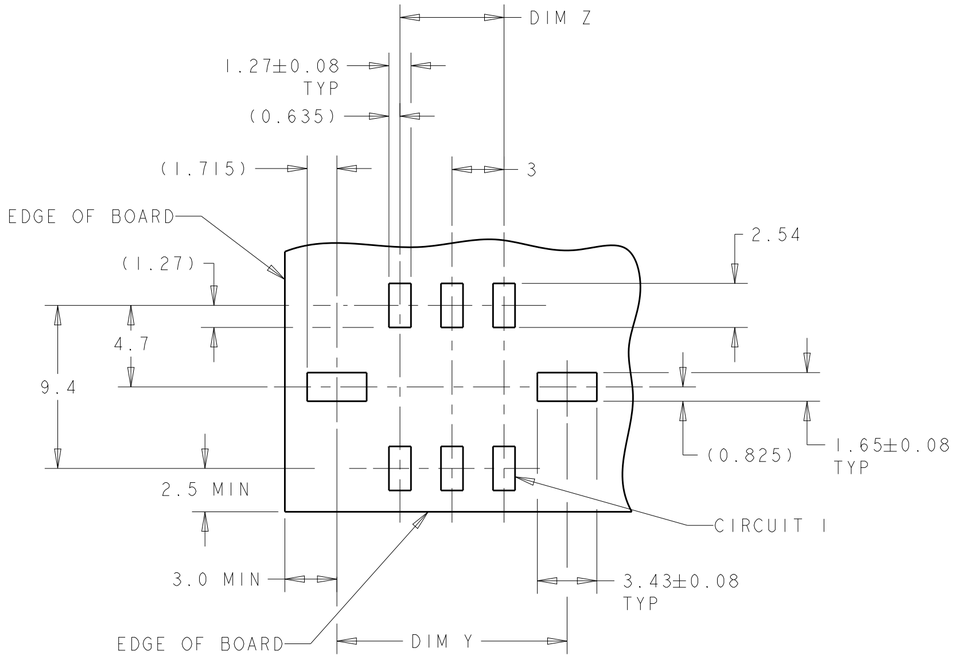

RECOMMENDED PCB LAYOUT 4
(COMPONENT SIDE)

1 MATERIAL:
CONTACTS - BRASS.
HOUSING - UL 94V-0 RATED HIGH TEMP NYLON, COLOR; BLACK.
HOLD DOWNS - PHOSPHOR BRONZE.

2 FINISH:
CONTACTS - 2.54µm MINIMUM TIN-LEAD OVER 1.27µm MINIMUM NICKEL.
HOLD DOWNS - 2.54µm TIN LEAD.

4 RECOMMENDED PC BOARD THICKNESS OF 1.57.

5 KAPTON VACUUM PICK UP BUTTON.

6 DIMENSION APPLIES TO SOLDERTAIL SURFACES AND STANDOFF SURFACES.

7 ALL SOLDERTAILS AND HOLD DOWNS.

8 FINISH:
CONTACTS - 2.54µm MINIMUM MATTE TIN OVER 1.27µm MINIMUM NICKEL.
HOLD DOWNS - 2.54µm MATTE TIN.

	FINISH	DIM V	DIM W	DIM Y	DIM Z	DIM X	NO. OF POSN.	ASSEMBLY
	8	43.04	36.86	40.27	33.00	40.00	24	5-794636-4
		40.04	33.86	37.27	30.00	37.00	22	5-794636-2
		37.04	30.86	34.27	27.00	34.00	20	5-794636-0
		34.04	27.86	31.27	24.00	31.00	18	4-794636-8
		31.04	24.86	28.27	21.00	28.00	16	4-794636-6
		28.04	21.86	25.27	18.00	25.00	14	4-794636-4
		25.04	18.86	22.27	15.00	22.00	12	4-794636-2
		22.04	15.86	19.27	12.00	19.00	10	4-794636-0
		19.04	12.86	16.27	9.00	16.00	8	3-794636-8
		16.04	9.86	13.27	6.00	13.00	6	3-794636-6
		13.04	6.86	10.27	3.00	10.00	4	3-794636-4
		10.04	3.86	7.27	-	7.00	2	3-794636-2
SUPERSEDED BY 5-794636-4	2	43.04	36.86	40.27	33.00	40.00	24	~~2-794636-4~~
SUPERSEDED BY 5-794636-2		40.04	33.86	37.27	30.00	37.00	22	~~2-794636-2~~
SUPERSEDED BY 5-794636-0		37.04	30.86	34.27	27.00	34.00	20	~~2-794636-0~~
SUPERSEDED BY 4-794636-8		34.04	27.86	31.27	24.00	31.00	18	~~1-794636-8~~
SUPERSEDED BY 4-794636-6		31.04	24.86	28.27	21.00	28.00	16	~~1-794636-6~~
SUPERSEDED BY 4-794636-4		28.04	21.86	25.27	18.00	25.00	14	~~1-794636-4~~
SUPERSEDED BY 4-794636-2		25.04	18.86	22.27	15.00	22.00	12	~~1-794636-2~~
SUPERSEDED BY 4-794636-0		22.04	15.86	19.27	12.00	19.00	10	~~1-794636-0~~
SUPERSEDED BY 3-794636-8		19.04	12.86	16.27	9.00	16.00	8	~~794636-8~~
SUPERSEDED BY 3-794636-6		16.04	9.86	13.27	6.00	13.00	6	~~794636-6~~
SUPERSEDED BY 3-794636-4		13.04	6.86	10.27	3.00	10.00	4	~~794636-4~~
SUPERSEDED BY 3-794636-2		10.04	3.86	7.27	-	7.00	2	~~794636-2~~

THIS DRAWING IS A CONTROLLED DOCUMENT.

DIMENSIONS: mm

TOLERANCES UNLESS OTHERWISE SPECIFIED:
0 PLC ±-
1 PLC ±-
2 PLC ±0.13
3 PLC ±-
4 PLC ±-
ANGLES ±

MATERIAL 1

FINISH SEE TABLE

DWN S. HOOVER 23-MAR-2005
CHK C. JONES 23-MAR-2005
APVD C. JONES 23-MAR-2005

PRODUCT SPEC -
APPLICATION SPEC -
WEIGHT -

TE Connectivity

NAME SURFACE MOUNT, VERTICAL, MECHANICAL HOLD DOWN, ASSEMBLY, TIN HEADER, DUAL ROW, MICRO MATE-N-LOK (TM)

SIZE A2 | CAGE CODE 00779 | DRAWING NO C-794636 | RESTRICTED TO -

CUSTOMER DRAWING | SCALE 4:1 | SHEET 1 OF 1 | REV J2

794636

1471-9 (3/13)