SIGN	DATE	DESCRIPTION	APPROVER
1	02/02.07	Soldering temperature changed from 245° to 250°	Tason
2	02/02.07	Part NO is Changed	Tason
3	03/04.08	Screw from M3 to M3.5	Aaron
4	04.08.09	Current,wire range , torque are changed	JODY
5	9/14'09	Wire guard solder pin is changed from Brass to Copper	Aaron
6	02/22'10	Torque is changed from 8.9Lb-In to 6.9Lb-In	Aaron
7	08/03'10	Clamp is changed	Aaron
8	12/13'10	Add is " TUV "	Chen Bo

THIS IS CAD DRAWING, DO NOT REVISE MANUALLY!!!

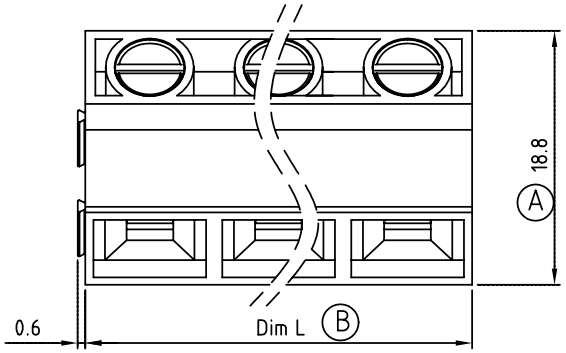

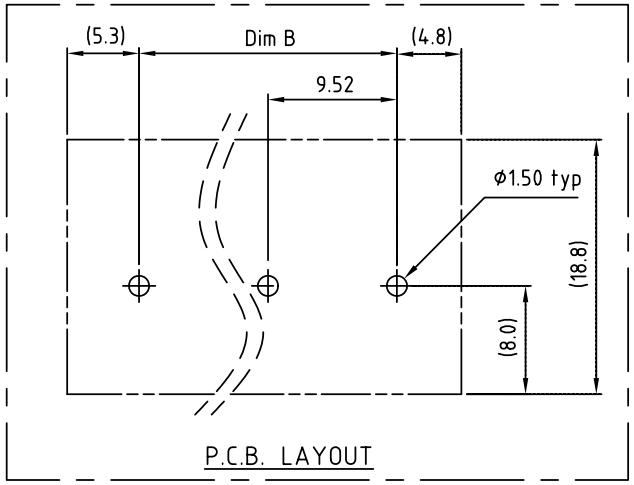

P.C.B. LAYOUT

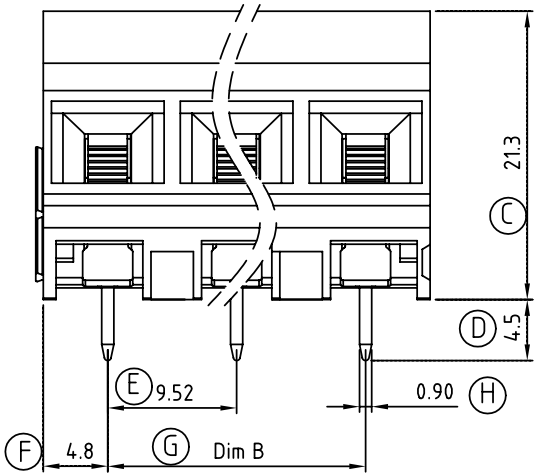

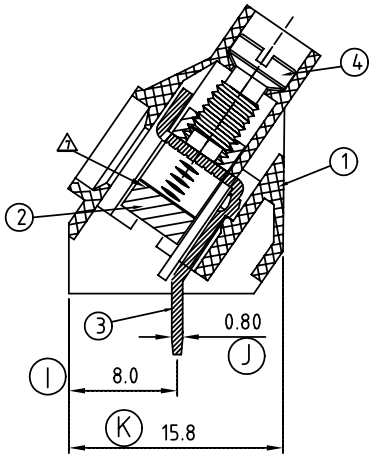

Material:

- Item 1 Terminal housing:Thermoplastic (UL 94V-0)
- Item 2 Clamp: Brass, Ni plated
- 5 Item 3 Wire guard solder pin: Copper,Tin plated
- Item 4 Terminal screw: Steel Zinc plating"-"slot type

8 Electrical	cULus	TUV
Voltage rating:	300VAC	750VAC
4 Current rating:	30A	41A
Wire range:		0.20-6.0mm^2
4 Solid wire(AWG):	10-24	
4 Stranded wire(AWG):	10-24	
6 4 Torque(Lb-In):	6.9	0.85 N.m
3 Screw:	M3.5	
Wire strip length:	6-7mm	
Withstanding Voltage:	1.6KV	3.0KV
Operating temperature:	-40°C to +115°C	
1 Soldering temperature:	250°C±10°C/5 Sec	
Safety Approval:	cULus	TÜV

2 T7 xx 23 x 1 xxxx G

- G → RoHS Pb<40,000ppm
- xxxx → 0000 Standard @ Logo; 000A Standard ANY Logo; Any special item by customer request, please contact sales department.
- 1 → 0 Black (RAL9005); 2 Red (RAL3001/D); 3 Orange(RAL2011/P); 4 Yellow(RAL1018/A); 5 Green(RAL6018/T); 6 Blue (RAL5015/A); 8 Grey(RAL7035/D)
- xx → No. of poles end stackable design: 02 2 CONTACTS; 03 3 CONTACTS; ... ...; 16 16 CONTACTS

Poles	02	03	04	05	06	07	08	09	10	11	12	13	14	15	16
Dim L	19.04	28.56	38.08	47.60	57.12	66.64	76.16	85.68	95.20	104.72	114.24	123.76	133.28	142.80	152.32
Dim B	9.52	19.04	28.56	38.08	47.60	57.12	66.64	76.16	85.68	95.20	104.72	114.24	123.76	133.28	142.80
TOL	±0.20					±0.30					±0.40				

ANYTEK

CUSTOMER COPY

ALL RIGHTS RESERVED. REPRODUCTION OR ISSUE TO THIRD PARTIES IN ANY FORM WHATEVER IS NOT PERMITTED WITHOUT WRITTEN AUTHORITY FROM THE PROPRIETOR. PROPERTY OF ANYTEK TECHNOLOGY CO., LTD

TITLE	T7 - 9.52mm 45° Series 2P-16P" - " Screw Stackable				
PART NO.	T7xx23x1xxxxG			DWG NO.	8T70201
APPROVED	CHECKED	DESIGNED	DRAWN	CUST NO.	
			Chen Bo 2010.12.13	UNIT: mm	
				SCALE: NONE	
				SHEET: 01/01	REV.: J

Tolerance	
X.	±0.50
X.X	±0.30
X.XX	±0.10
X°	±1°