THIS DRAWING IS UNPUBLISHED. RELEASED FOR PUBLICATION 20
© COPYRIGHT 20 BY - ALL RIGHTS RESERVED.

| LOC | DIST |
|---|---|
| CM | 00 |

REVISIONS

| P | LTR | DESCRIPTION | DATE | DWN | APVD |
|---|---|---|---|---|---|
| | G1 | REVISED PER ECR-16-011506 | 27JUN2017 | NK | CX |

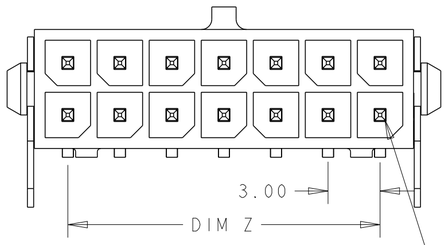


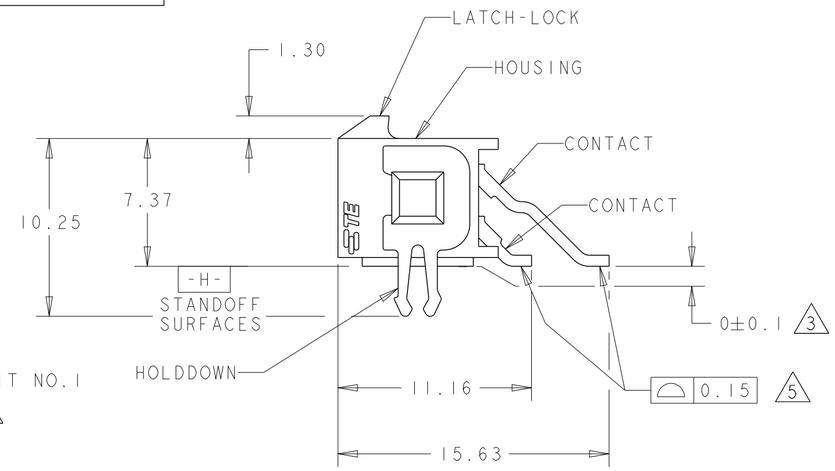


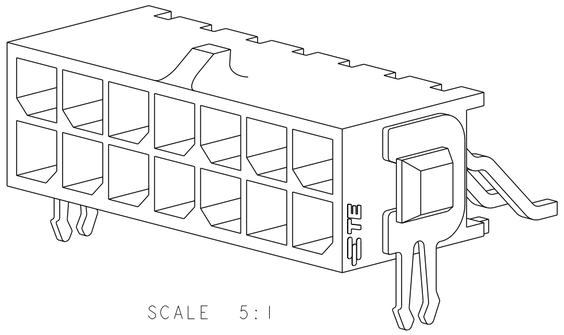

SCALE 5:1

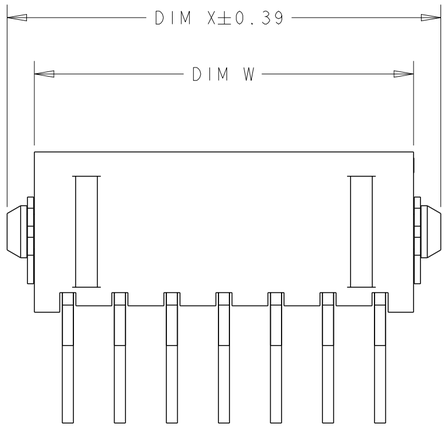


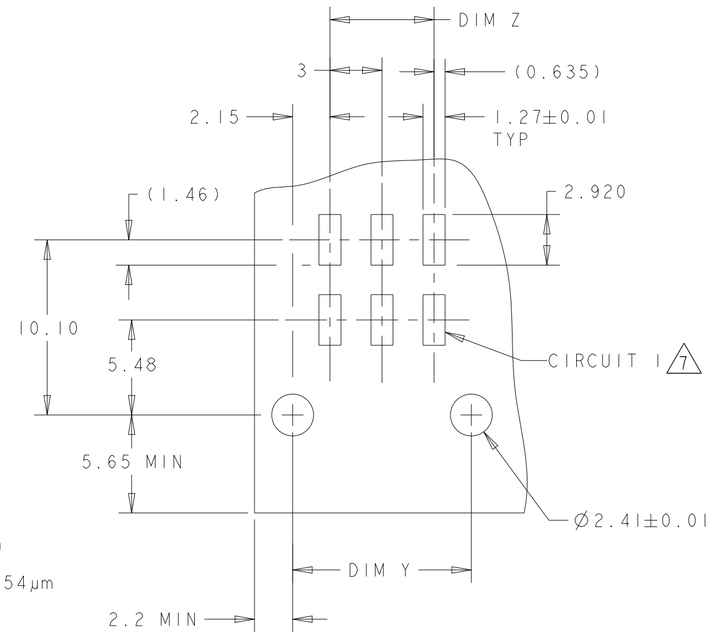


RECOMMENDED PCB LAYOUT 4
(COMPONENT SIDE)

1 MATERIAL;
CONTACTS - BRASS.
HOUSING - UL 94V-0 RATED HIGH TEMP NYLON, COLOR; BLACK.
HOLDDOWNS - PHOSPHOR BRONZE.

2 PLATING;
CONTACTS - 0.76µm MINIMUM GOLD OVER 2.54µm MINIMUM NICKEL ON MATING AREA. 2.54µm TIN-LEAD MINIMUM OVER 2.54µm NICKEL MINIMUM ON SOLDER TAILS.
HOLDOWNS - 2.54µm TIN LEAD.

3 DIMENSION APPLIES TO SOLDERTAIL SURFACES AND STANDOFF SURFACES.

4 RECOMMENDED PC BOARD THICKNESS OF 1.57.

5 ALL SOLDERTAILS.

6 PLATING;
CONTACTS - 0.76µm MINIMUM GOLD OVER 2.54µm MINIMUM NICKEL ON MATING AREA. 2.54µm MATTE TIN MINIMUM OVER 2.54µm NICKEL MINIMUM ON SOLDER TAILS.
HOLDOWNS - 2.54µm MATTE TIN.

7 CIRCUIT NUMBER 1 IS LOCATED AT THE BOTTOM RIGHT WITH THE LATCH-LOCK ON TOP LOOKING INTO THE CAVITIES

| | FINISH | DIM W | DIM Y | DIM Z | DIM X | NO. OF POSN. | PART NUMBER |
|---|---|---|---|---|---|---|---|
| | 6 | 36.86 | 37.30 | 33.00 | 40.00 | 24 | 5-794626-4 |
| | 6 | 33.86 | 34.30 | 30.00 | 37.00 | 22 | 5-794626-2 |
| | 6 | 30.86 | 31.30 | 27.00 | 34.00 | 20 | 5-794626-0 |
| | 6 | 27.86 | 28.30 | 24.00 | 31.00 | 18 | 4-794626-8 |
| | 6 | 24.86 | 25.30 | 21.00 | 28.00 | 16 | 4-794626-6 |
| | 6 | 21.86 | 22.30 | 18.00 | 25.00 | 14 | 4-794626-4 |
| | 6 | 18.86 | 19.30 | 15.00 | 22.00 | 12 | 4-794626-2 |
| | 6 | 15.86 | 16.30 | 12.00 | 19.00 | 10 | 4-794626-0 |
| | 6 | 12.86 | 13.30 | 9.00 | 16.00 | 8 | 3-794626-8 |
| | 6 | 9.86 | 10.30 | 6.00 | 13.00 | 6 | 3-794626-6 |
| | 6 | 6.86 | 7.30 | 3.00 | 10.00 | 4 | 3-794626-4 |
| | 6 | 3.86 | 4.30 | - | 7.00 | 2 | 3-794626-2 |
| SUPERSEDED BY 5-794626-4 | 2 | 36.86 | 37.30 | 33.00 | 40.00 | 24 | ~~2-794626-4~~ |
| SUPERSEDED BY 5-794626-2 | 2 | 33.86 | 34.30 | 30.00 | 37.00 | 22 | ~~2-794626-2~~ |
| SUPERSEDED BY 5-794626-0 | 2 | 30.86 | 31.30 | 27.00 | 34.00 | 20 | ~~2-794626-0~~ |
| SUPERSEDED BY 4-794626-8 | 2 | 27.86 | 28.30 | 24.00 | 31.00 | 18 | ~~1-794626-8~~ |
| SUPERSEDED BY 4-794626-6 | 2 | 24.86 | 25.30 | 21.00 | 28.00 | 16 | ~~1-794626-6~~ |
| SUPERSEDED BY 4-794626-4 | 2 | 21.86 | 22.30 | 18.00 | 25.00 | 14 | ~~1-794626-4~~ |
| SUPERSEDED BY 4-794626-2 | 2 | 18.86 | 19.30 | 15.00 | 22.00 | 12 | ~~1-794626-2~~ |
| SUPERSEDED BY 4-794626-0 | 2 | 15.86 | 16.30 | 12.00 | 19.00 | 10 | ~~1-794626-0~~ |
| SUPERSEDED BY 3-794626-8 | 2 | 12.86 | 13.30 | 9.00 | 16.00 | 8 | ~~794626-8~~ |
| SUPERSEDED BY 3-794626-6 | 2 | 9.86 | 10.30 | 6.00 | 13.00 | 6 | ~~794626-6~~ |
| SUPERSEDED BY 3-794626-4 | 2 | 6.86 | 7.30 | 3.00 | 10.00 | 4 | ~~794626-4~~ |
| SUPERSEDED BY 3-794626-2 | 2 | 3.86 | 4.30 | - | 7.00 | 2 | ~~794626-2~~ |

THIS DRAWING IS A CONTROLLED DOCUMENT.

DIMENSIONS: mm

TOLERANCES UNLESS OTHERWISE SPECIFIED:
0 PLC ±-
1 PLC ±-
2 PLC ±0.13
3 PLC ±-
4 PLC ±-
ANGLES ±-

MATERIAL 1

FINISH SEE TABLE

DWN K. WHITAKER 19MAR2003
CHK C. JONES 19MAR2003
APVD C. JONES 19MAR2003
PRODUCT SPEC -
APPLICATION SPEC -
WEIGHT -

TE Connectivity

NAME SURFACE MOUNT, RIGHT ANGLE, MECHANICAL HOLDDOWN, ASSEMBLY, 30 GOLD HEADER, DUAL ROW, MICRO MATE-N-LOK TM

| SIZE | CAGE CODE | DRAWING NO | RESTRICTED TO |
|---|---|---|---|
| A2 | 00779 | C-794626 | - |

CUSTOMER DRAWING SCALE 4:1 SHEET 1 OF 1 REV G1