THIS DRAWING IS UNPUBLISHED. RELEASED FOR PUBLICATION
© COPYRIGHT ALL RIGHTS RESERVED.

REVISIONS					
P	LTR	DESCRIPTION	DATE	DWN	APVD
	C1	FIRST RELEASED	29OCT2014	T.W	S.W
	C2	1-1563305-5 ADDED	11MAY2015	T.W	S.W

(C2) SHOWN VIEW FOR PN 1-1563305-5

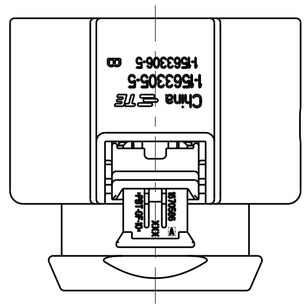

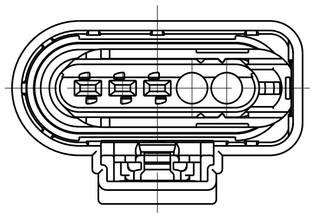

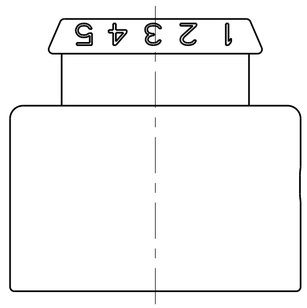

PN 1-1563305-4 AS SHOWN

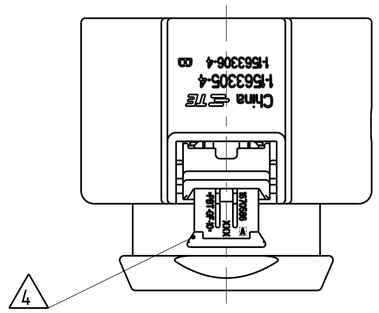

A-A

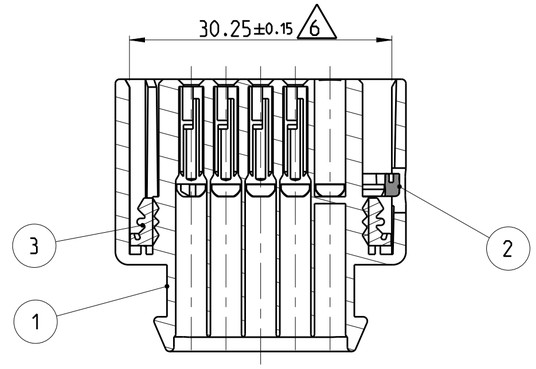

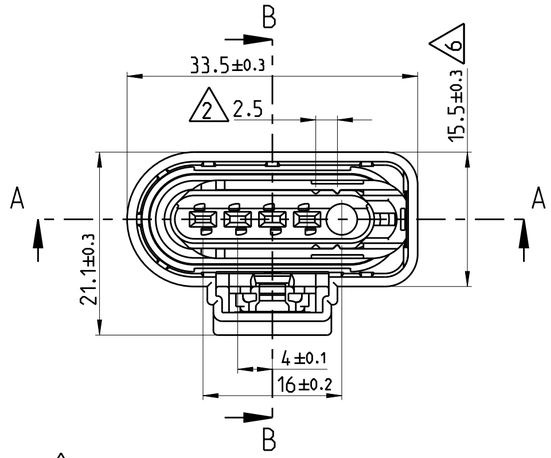

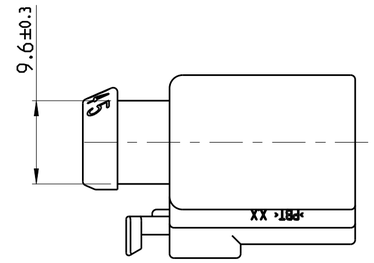

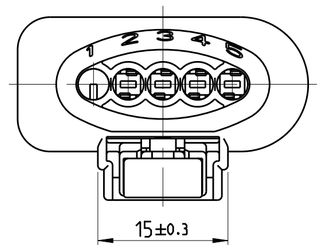

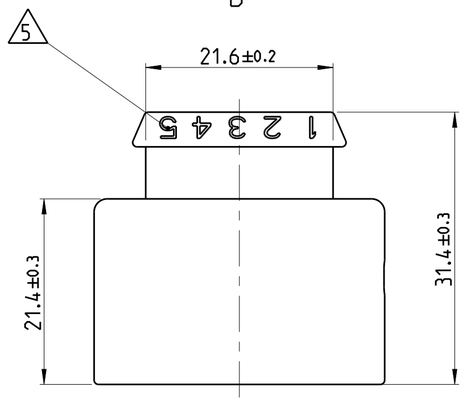

B-B

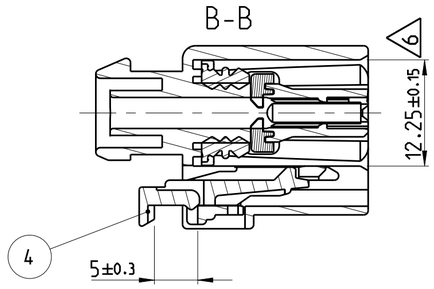

NOTES

1. SUITABLE TERMINAL 1241380-1 AND WIRE SEALING 964971-1
   SUITABLE MATING PART 1-969920-1
2. (2) CONDITION AS SUPPLIED: RETAINER IN PRE-LOCKED POSITION, AFTER CONTACT LOADING TO DRIFT IN THIS DIRECTION (2.5mm)
3. BULK PACKAGED
4. (4) WITH CPA (CONNECTOR POSITION ASSURANCE)
5. (5) CONTACT CAVITY NUMBER
6. (6) ALLOWED WARPAGE ±0.5
7. (7) CHAMBER 1 CLOSED
8. (C2) (8) CHAMBER 1 AND 2 CLOSED

ITEM NO	DESCRIPTION	COLOR	MATERIAL	REV	TE-NO	COD	
4	CPA. ...	RED	PBT-GF10	C	1-1563305-5	I	(4)(8) (C2)
3	RADIAL SEAL ...	NATURAL	MVQ				
2	RETAINER. ...	VIOLET	PBT-GF10				
1	3 POSITION. AMP MCP1.5K. ...	PLATINUM GREY	PBT				
4	CPA. ...	RED	PBT-GF10	C	1-1563305-4	I	(4)(7)
3	RADIAL SEAL ...	NATURAL	MVQ				
2	RETAINER. ...	VIOLET	PBT-GF10				
1	4 POSITION. AMP MCP1.5K. ...	GREY	PBT				

1471-9 (3/13)

THIS DRAWING IS A CONTROLLED DOCUMENT.

DIMENSIONS: mm

TOLERANCES UNLESS OTHERWISE SPECIFIED:
0 PLC ± ACC.TO
1 PLC ± DIN 16901-140
2 PLC ± CENTRIC TO
3 PLC ± NOMINAL DIM
4 PLC ±
ANGLES ±

MATERIAL: SEE TABLE
FINISH: - / -

DWN T.WANG 29OCT2014
CHK H.YE 29OCT2014
APVD S.WANG 29OCT2014
PRODUCT SPEC -
APPLICATION SPEC -
WEIGHT -

TE Connectivity

NAME: 3/4 POS. AMP MCP1.5K, RECEPTACLE HOUSING

SIZE	CAGE CODE	DRAWING NO	RESTRICTED TO
A2	00779	C-1563305	-

Customer Drawing | SCALE 2:1 | SHEET 1 OF 1 | REV C2