DATE	DESCRIPTION	REV.
5.23.11	CHANGE AS PER ECN 11-067	A

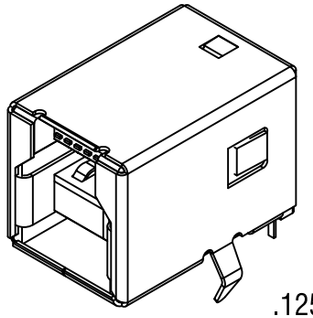

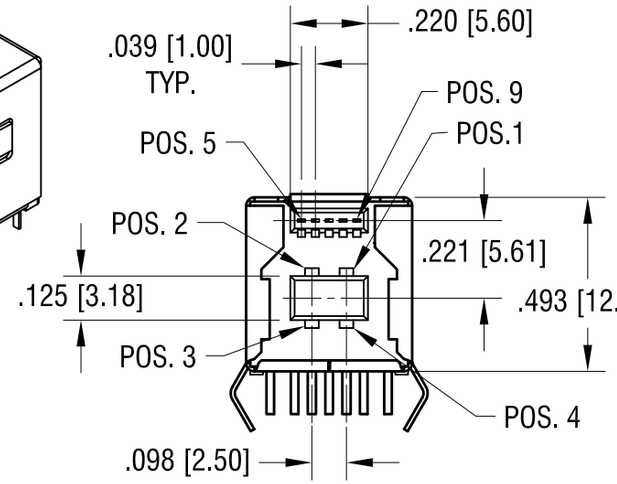

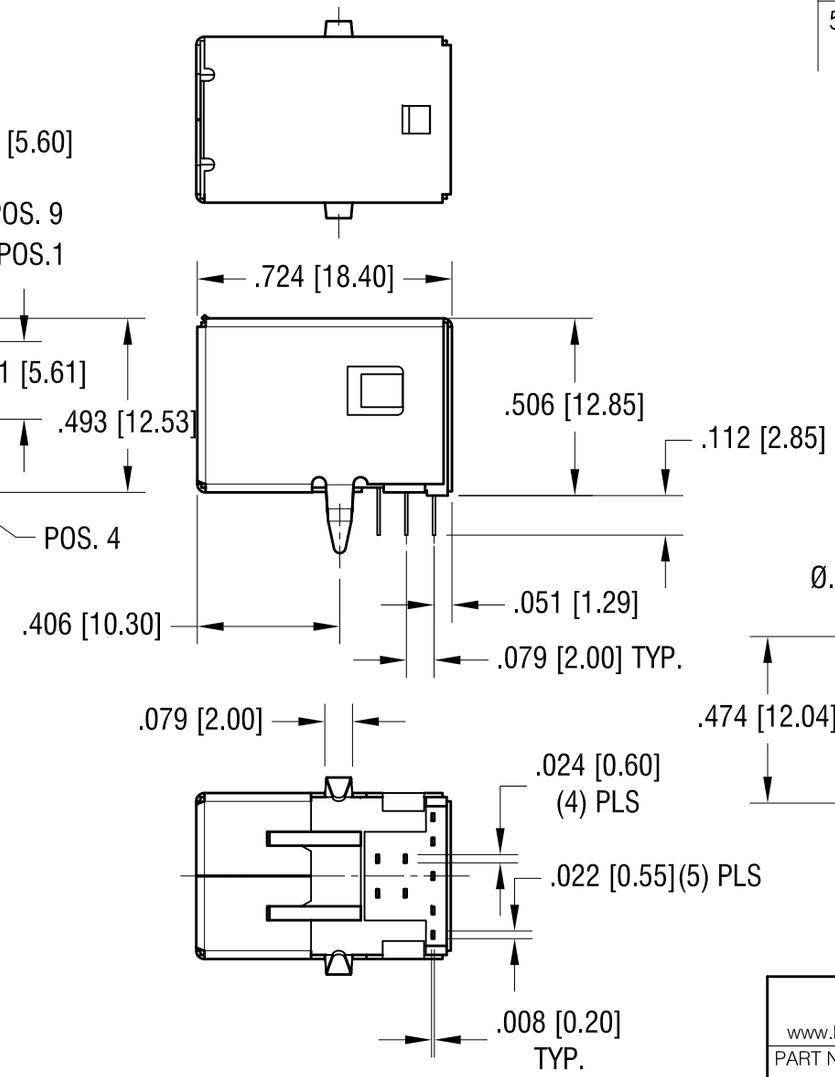

SB3.0 'B' RECEPTACLE FOOTPRINT

TOLERANCE ±.002 [±0.05]

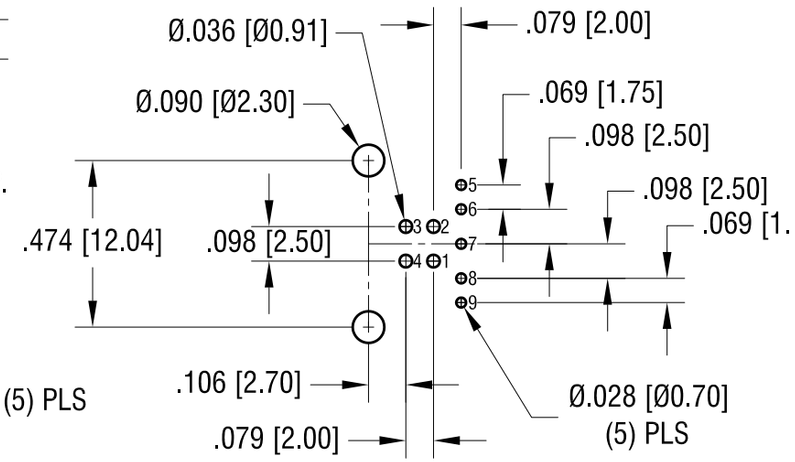

SOCKET SPECIFICATIONS:

SHELL: MAT'L- BRASS, NICKEL PLATE

CONTACT: MAT'L- PHOSPHOR BRONZE AND BRASS

INSULATION: MAT'L- THERMOPLASTIC (COLOR- BLUE), UL 94V-0

FINISH- GOLD FLASH OVER NICKEL ON CONTACT AREA

TIN OVER NICKEL ON SOLDER TAILS

ELECTRICAL CHARACTERISTICS:

ELECTRICAL CHARACTERISTICS:

CONTACT RESISTANCE: 30m Ω max.

INSULATION RESISTANCE: 1000 mega Ω min.

DIELECTRIC VOLTAGE : 1.8 Amp AT 250 V AC MIN.

MECHANICAL CHARACTERISTICS:

OPERATING TEMPERATURE: -13°F (-25°C) TO 176°F (+80°C)

INSERTION FORCE: 35N MAX.

THIS DOCUMENT IS THE PROPERTY OF KEYSTONE ELECTRONICS CORP. AND SHALL NOT BE REPRODUCED, DISTRIBUTED OR USED AS A BASIS FOR MANUFACTURE WITHOUT PRIOR WRITTEN PERMISSION FROM KEYSTONE ELECTRONICS CORP.

KEYSTONE ELECTRONICS CORP.

www.keyelco.com • NEW HYDE PARK, NY 11040 • Tel (516) 328-7500

PART NAME: USB 3.0 TYPE B			
MATERIAL: AS NOTED			
FINISH: AS NOTED	DRN BY: NT	DATE: 4.09.10	
	APP'D: LN	SCALE: 2X	
TOLERANCES INCH [MM] DECIMAL ± .010 [± 0.25] ANGULAR ± 1° UNLESS OTHERWISE SPECIFIED	CODE: C	DWG NO.: 950	