REVISIONS			
REV	DESCRIPTION	DATE	APPROVED
01_1	REVISED	6/19/96 7/16/96	
B	PER EC 0U20-0692-00	9/25/01	C. Hoang 9/25/01

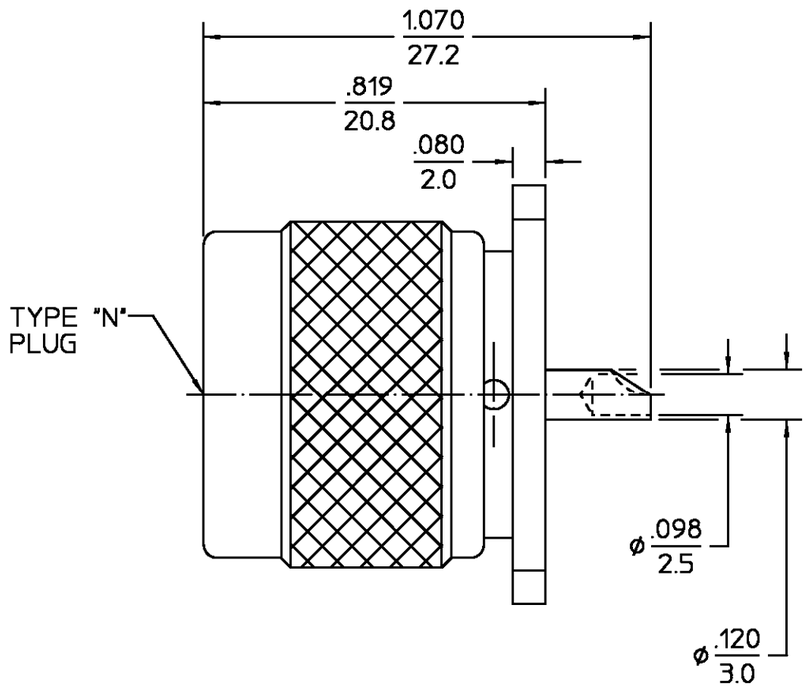

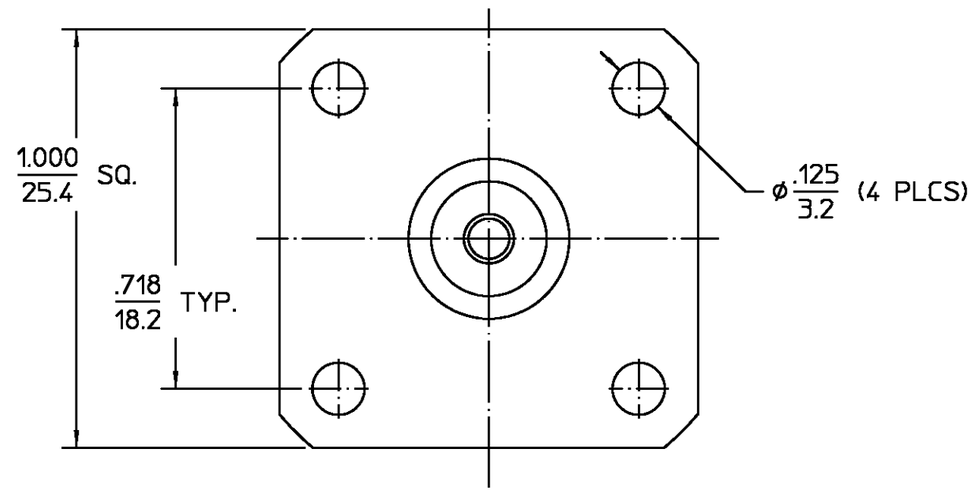

.XXX = in
XX.X = mm REF.

COMPONENT	MATERIAL	FINISH
HOUSING COUPLING NUT	BRASS PER ASTM-B-16, HALF HARD	NICKEL PLATE PER QQ-N-290
DIELECTRIC	TFE FLUOROCARBON PER ASTM-D-1457	N/A
CENTER CONTACT	BRASS PER ASTM-B-16, HALF HARD	GOLD PLATE PER MIL-G-45204
RETAINING RING	PHOSPHOR BRONZE PER QQ-B-750, GRADE B2	N/A
GASKET	SILICONE RUBBER PER ZZ-R-765	N/A

NOTES:

1. CAPTURED CENTER CONTACT

UNLESS OTHERWISE SPECIFIED DIMENSIONS ARE IN INCHES

FRAC.	DEC.	ANGLES
± 1/64	±.005	± 1°

DRAWN BY R.M.K.	DATE 1/26/71	
CHECKED BY P.R.B.	2/2/71	
APP'D BY B.W.C.	2/3/71	

AMP

AMP Incorporated
140 Fourth Avenue
Waltham, MA 02451-7599

These drawings and specifications are the property of M/A COM Interconnect Div. and shall not be reproduced or copied or used in whole or in part as the basis for the manufacture or sale o f item(s) without written permission.

USE ASS'Y PROCEDURE

NO. A.P. N/A

TITLE STRAIGHT PANEL PLUG RECEPTACLE

SIZE	CODE IDENT NO.		REV
B	26805	3051-0000-10	01_1
SCALE 4:1			SHEET 1 OF 1

CUSTOMER DRAWING

AMP PART # 1057275-1
SHEET 1 OF 1 REV B