Altech Corp.®

Serving the Automation & Control Industry since 1984

Quality System

Quality Endorsed Company

Interface Modules & Industrial Relays

Altech Corp.®

Since 1984, Altech Corporation has grown to become a leading supplier of automation and industrial control components. Headquartered in Flemington, NJ, Altech has an experienced staff of engineering, manufacturing and sales personnel to provide the highest quality products with superior service. This is the Altech Commitment!

With experienced Product Engineers and Customer Service personnel, Altech provides solutions to your most pressing application challenges. All with one thought in mind - ***to ensure that we solve your problem the first time!***

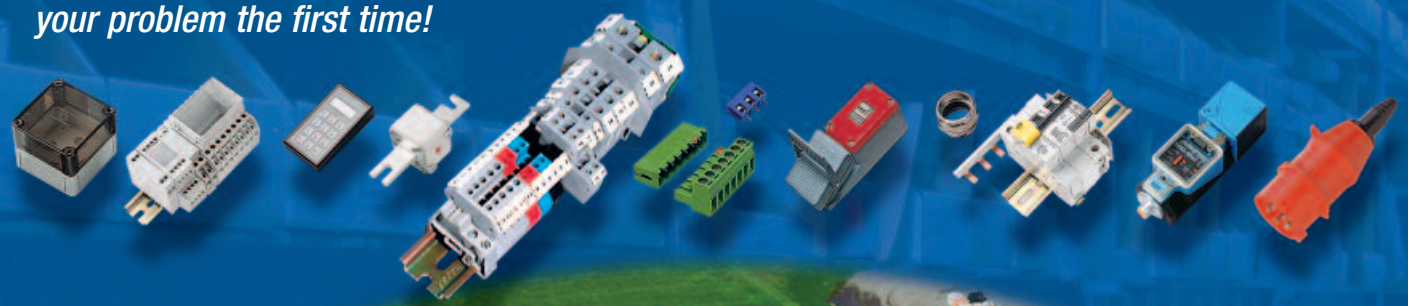

Quality Commitment

Altech's control components meet diverse national and international standards such as UL, NEC, CSA, IEC, VDE and more. Altech provides superior customer service and delivery through Total Quality Management and Continuous Process Improvement. Altech is ISO 9001 approved. We perform these services with honesty and integrity and are committed to achieve these goals.

TABLE OF CONTENTS

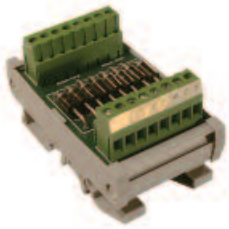

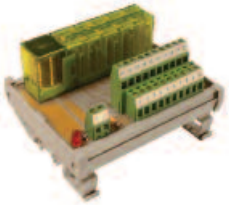

INTERFACE MODULES INTRODUCTION 4-5

Connector to Terminal Block Modules 6-9

Diode Modules & Component Carriers 10-14

Wire to RJ45 Module 15

Interface Relay Modules and Carriers 16-23

Interfaces, High Current Isolated 24-27

Safety Relay Modules 28-41

Interfaces 42-45

PCB Mounting Tracks 46-47

INDUSTRIAL RELAYS INTRODUCTION 48-49

Industrial Electromagnetic Relays 50-71

Miniature Electromagnetic Relays 72-83

Slimline Interface Relays 84-89

Subminiature Electromagnetic and Solid State Relays 90-101

Relays for Photovoltaic Systems 102-103

Relay Socket Combination 104-109

Industrial Relay Accessories 110-115

Index 118-121

Terms & Conditions 122

INTERFACE MODULES

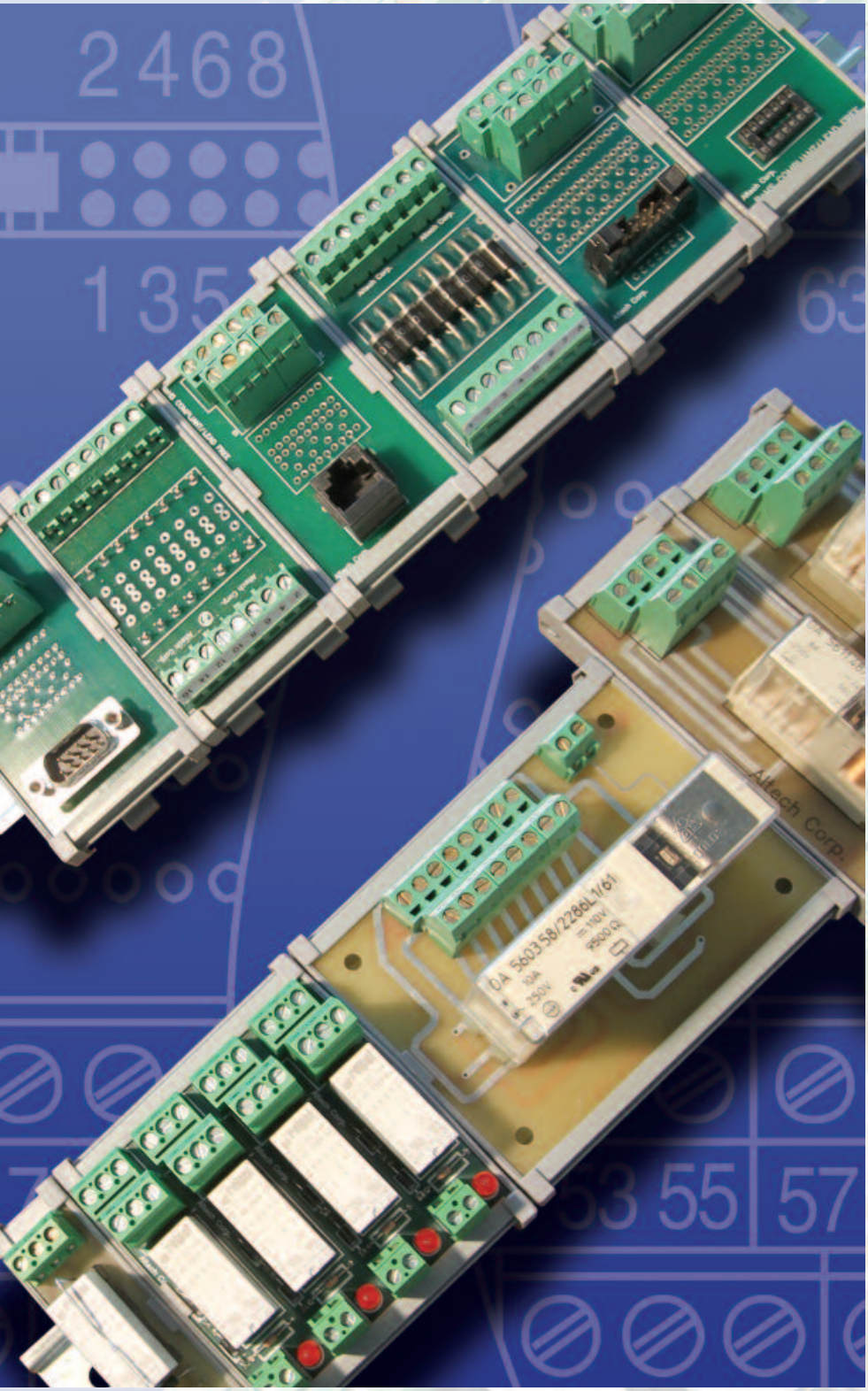

Link incompatible hardware or expand the capabilities of logic systems with Altech interface and electronic modules and carriers. These DIN Rail or panel mounted printed circuit board modules, subsystems and carriers give design flexibility, simplify panel layouts and reduce maintenance and downtime.

Altech's compact interface modules provide a flexible, cost effective transition from Sub-D, Ribbon Cable and other connectors to terminal blocks.

Altech's electronic modules include Diode, Fuse, Varistor, Optocoupler (I/O), Relay, power supplies and custom modules.

If your needs go beyond our comprehensive range of standard interface and electronic modules, Altech can custom design a module to meet even the most sophisticated requirements.

Modules are supplied completely assembled with ready to wire screw-cage terminal blocks in an extruded track. The track can be mounted on 35 or 32mm DIN Rail or can be panel mounted. Select individual components and mount your own electronic boards with Altech mounting tracks.

DATA SUBJECT TO CHANGE WITHOUT NOTICE

Connector-To-Terminal Block

Compact and reliable transitions between high density connectors and high quality screw-cage clamp terminal blocks.

- FBK Ribbon Cable, up to 64 poles
- Subminiature - D, up to 50 poles

Miniature Relays

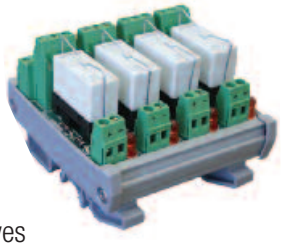

Traditional relay and safety relay modules in a high density package.

- Protect equipment
- Provide insulation
- Control motors, solenoid and valves
- Safety relays for emergency stop, safety gate and two-hand stop

Diode Modules & Component Carriers

Use our Diode Modules to build lamp test circuits, decouple signals, etc. Mount your own components into our Component Carriers (supplied without electronic components). Or, tell us what you need and we'll install it for you.

- DM Diode Modules have series connection 1A or 3A diodes, and 1A diode gates with common cathodes or anodes, providing commonly used diode arrangements
- BSM Component Carrier has factory installed fork-and eyelet soldering posts in each series trace
- CCA Component Carrier consists of a printed circuit board with four in-line and two bus-connection through-holes to solder pads in each trace, complete with terminal blocks

Custom Interface Modules

If your design or application requires more functionality or features than our standard product, Altech offers complete engineering, prototype and production services for custom modules.

Our staff has the ability to take your design or requirements and manufacture your custom module. Custom module production generally includes engineering, PCB layout and prototypes, packaged in Altech extrusions for mounting on panels or DIN Rail. In many industrial control systems, customized designs are the solution for many problems.

Altech provides a quick turnaround and competitive solution to your problem.

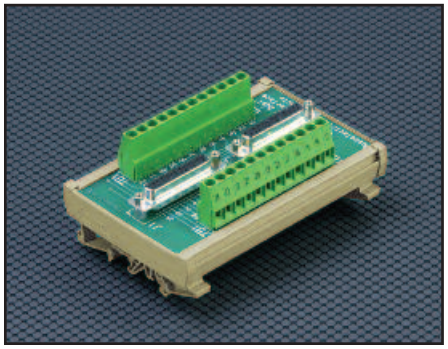

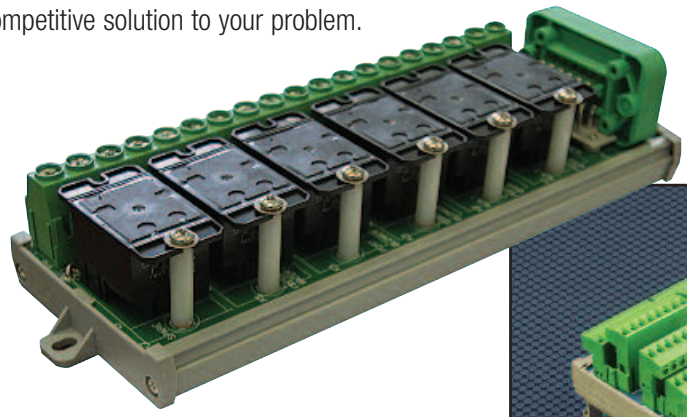

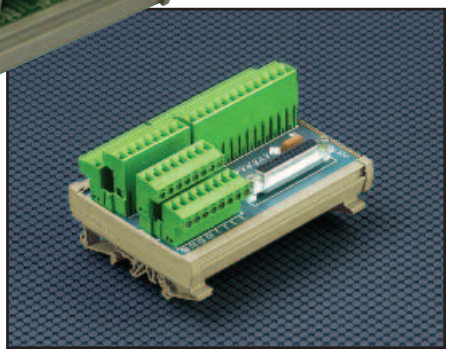

DATA SUBJECT TO CHANGE WITHOUT NOTICE

CONNECTOR TO TERMINAL BLOCK MODULES

INTERFACES CONNECTOR-TO-WIRE
Ribbon Cable Module
35 or 32 mm DIN Rail

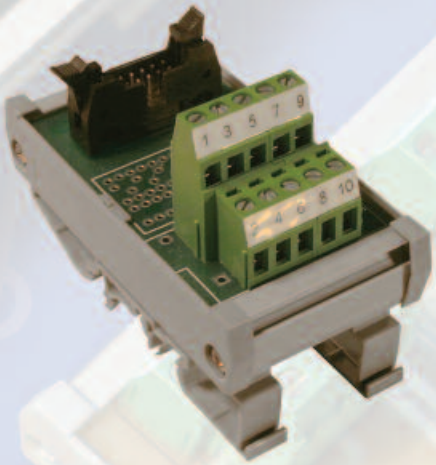

Compact Ribbon Connector Modules provide an interface between multi-wire flat cables outfitted with IDC connectors and discrete wires. Up to 64 conductors can be terminated saving time and eliminating wiring mistakes.No special wiring or tools are required. Ribbon Cable Interface Modules are typically used in communications, data processing, process control and other industrial applications. FBK Ribbon Cable Modules are supplied with short strain relief ejector latches (long ejector latches are available), screw-cage clamp terminal blocks and component solder pads for easy insertion of circuit building components. All terminal blocks are individually marked to correspond to the numbers on the header pins.

- Screw-Cage Clamp Connections
- Spring Clamp Connections Available
- Up to 64 Poles
- 4 to 5 Component Solder Pads Per Line
- .9mm (.035 in.) Diameter Component Mounting Holes
- DIN Rail Mount and Panel Mount Available

INTERFACES CONNECTOR-TO-WIRE
Subminiature D Module
35 or 32 mm DIN Rail

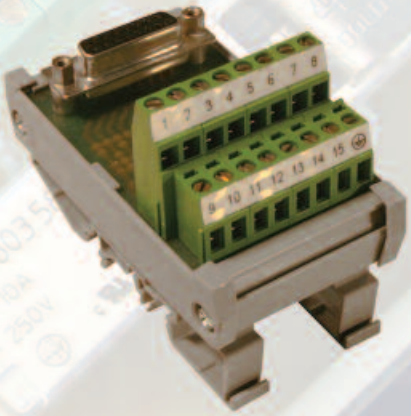

Compact Subminiature D (Sub D) Modules provide quick and reliable interfaces between high density connectors (back shells) with up to 50 poles and discrete wires. Connector-to-Wire Interface modules save time and eliminate wiring mistakes. No special tools are required. Sub D Interface modules are typically used in communications, data processing, process control and other industrial applications. Keyed by design, Sub D Modules are equipped with male or female connectors, screw-cage clamp terminal blocks, and component solder pads for easy insertion of circuit building components. All terminal blocks are individually marked to correspond to the numbers on the connector pins or sockets.

- Screw-Cage Clamp Connections
- Spring Clamp Connections Available
- 4 to 5 Component Solder Pads Per Line
- .9mm (.035 in.) Diameter Component Mounting Holes
- DIN Rail Mount, Panel Mount Available
- SD-F50 and SD-M50 are double-sided boards and do not have component solder pads.

DATA SUBJECT TO CHANGE WITHOUT NOTICE

INTERFACES CONNECTOR-TO-WIRE
Ribbon Cable Module
35 or 32mm DIN Rail Mount
FBK

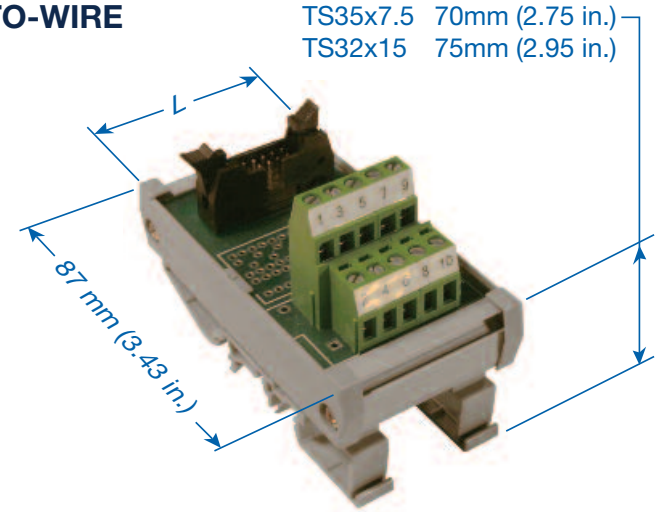

Technical Information

Current .....3 A
Voltage .....250V AC
Wire Range .....0.5-4 mm² / 22-12 AWG
Torque .....0.5-4 Nm / 4 lbs-in.
Stripping Length ...8 mm

SCREW CLAMP

Part Number	Type	No. of Poles	Module Length (L) in mm(in.)	Std. Pk.
5720.2	FBK10	10	46 (1.81)	1
5721.2	FBK14	14	46 (1.81)	1
5722.2	FBK16	16	68 (2.68)	1
5723.2	FBK20	20	68 (2.68)	1
5724.2	FBK26	26	80 (3.15)	1
5725.2	FBK34	34	93 (3.66)	1
5726.2	FBK40	40	114 (4.49)	1
5727.2	FBK50	50	139 (5.47)	1
5728.2	FBK60	60	180 (7.09)	1
5729.2	FBK64	64	180 (7.09)	1

SPRING CLAMP

Part Number	Type	No. of Poles	Module Length (L) in mm(in.)	Std. Pk.
5720.2/S	FBK10	10	46 (1.81)	1
5721.2/S	FBK14	14	46 (1.81)	1
5722.2/S	FBK16	16	68 (2.68)	1
5723.2/S	FBK20	20	68 (2.68)	1
5724.2/S	FBK26	26	80 (3.15)	1
5725.2/S	FBK34	34	93 (3.66)	1
5726.2/S	FBK40	40	114 (4.49)	1
5727.2/S	FBK50	50	139 (5.47)	1
5728.2/S	FBK60	60	180 (7.09)	1
5729.2/S	FBK64	64	180 (7.09)	1

PTH holes for convenient component insertion and easy soldering.

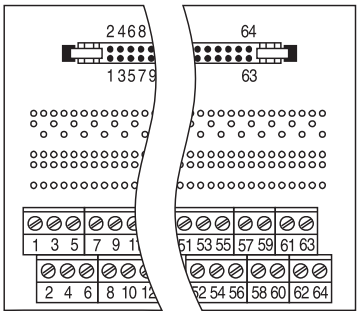

Female Connector SD-F37
37 Pin Socket Female Connector
Shown with component counting holes

Other models available; please contact Altech.

Suffix	Description
none	Screw Terminal; DIN Rail Mount
/S	Spring Terminal; DIN Rail Mount
/P	Screw Terminal; Panel Mount
/L	Screw Terminal; Long Latch Connector; DIN Rail Mount
/SL	Spring Terminal; Long Latch Connector; DIN Rail Mount
/SP	Spring Terminal; Panel Mount

Example: Part Number 5727.2/L for Long Latch model.

DATA SUBJECT TO CHANGE WITHOUT NOTICE

INTERFACES CONNECTOR-TO-WIRE
Subminiature SD **Male** Module
35 or 32 mm DIN Rail Mount

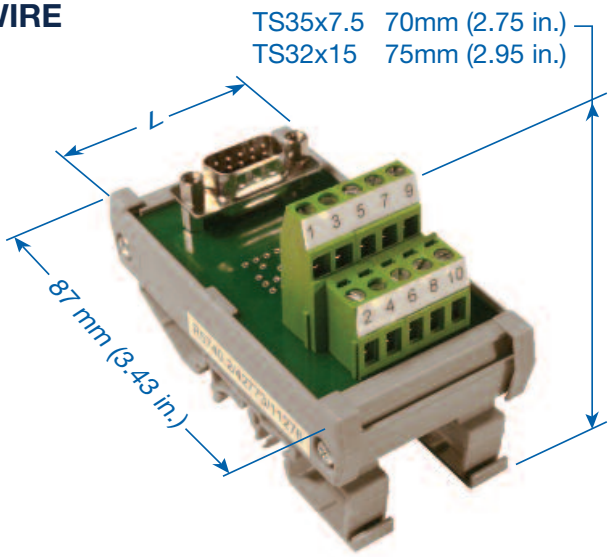

Technical Information

Current .....4 A
Voltage .....250V AC
Wire Range .....0.5-4 mm² / 22-12 AWG
Torque .....0.5-4 Nm / 4 lbs-in.
Stripping Length ...8 mm

SCREW CLAMP

Part Number	Type	No. of Poles	Module Length (L) in mm(in.)	Std. Pk.
5740.2	SD-M9	9	45 (1.77)	1
5741.2	SD-M15	15	53 (2.09)	1
5741.3*	HDSD-M15	15	53 (2.09)	1
5742.2	SD-M25	25	80 (3.15)	1
5743.2	SD-M37	37	113 (4.45)	1
5744.2[a,b]	SD-M50	50	136 (5.35)	1

SPRING CLAMP

Part Number	Type	No. of Poles	Module Length (L) in mm(in.)	Std. Pk.
5740.2/S	SD-M9	9	45 (1.77)	1
5741.2/S	SD-M15	15	53 (2.09)	1
5741.3/S*	HDSD-M15	15	53 (2.09)	1
5742.2/S	SD-M25	25	80 (3.15)	1
5743.2/S	SD-M37	37	113 (4.45)	1
5744.2/S[a,b]	SD-M50	50	136 (5.35)	1

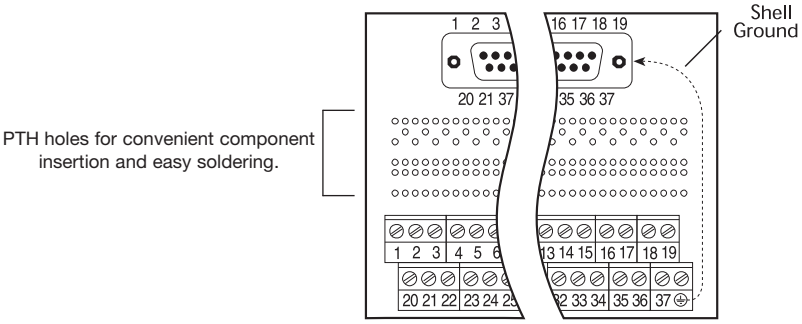

Female Connector SD-F37
37 Pin Socket Female Connector
Shown with component counting holes
(pads are on solder side)

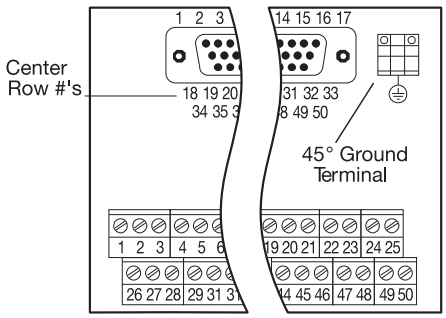

Female Connector SD-F50
50 Pin Socket Female Connector
Shown with no component solder pads

Other models available; please contact Altech.

Suffix	Description
none	Screw Terminal; DIN Rail Mount
/S	Spring Terminal; DIN Rail Mount
/P	Screw Terminal; Panel Mount
/L	Screw Terminal; Long Latch Connector; DIN Rail Mount
/SL	Spring Terminal; Long Latch Connector; DIN Rail Mount
/SP	Spring Terminal; Panel Mount

Example: Part Number 5727.2/L for Long Latch model.

* High density version.
[a] SD-M50 is only available with a 1.5A current rating.
[b] SD-F50 and SD-M50 are double-sided boards and do not have component solder pads.

DATA SUBJECT TO CHANGE WITHOUT NOTICE

INTERFACES CONNECTOR-TO-WIRE
Subminiature SD **Female** Module
35 or 32 mm DIN Rail Mount

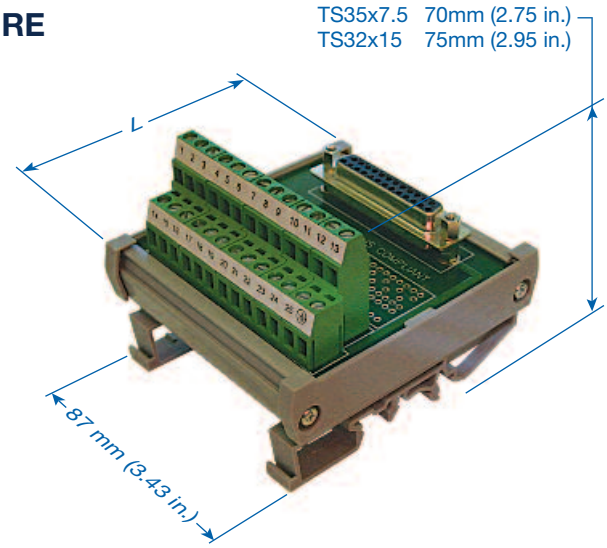

Technical Information

Current .....4 A
Voltage .....250V AC
Wire Range .....0.5-4 mm^2 / 22-12 AWG
Torque .....0.5-4 Nm / 4 lbs-in.
Stripping Length ...8 mm

SCREW CLAMP

Part Number	Type	No. of Poles	Module Length (L) in mm(in.)	Std. Pk.
5745.2	SD-F9	9	45 (1.77)	1
5746.2	SD-F15	15	49 (1.93)	1
5746.3*	HDSD-F15	15	49 (1.93)	1
5747.2	SD-F25	25	80 (3.15)	1
5748.2	SD-F37	37	113 (4.45)	1
5749.2[a,b]	SD-F50	50	136 (5.35)	1

SPRING CLAMP

Part Number	Type	No. of Poles	Module Length (L) in mm(in.)	Std. Pk.
5745.2/S	SD-F9	9	45 (1.77)	1
5746.2/S	SD-F15	15	49 (1.93)	1
5746.3/S*	HDSD-F15	15	49 (1.93)	1
5747.2/S	SD-F25	25	80 (3.15)	1
5748.2/S	SD-F37	37	113 (4.45)	1
5749.2/S[a,b]	SD-F50	50	136 (5.35)	1

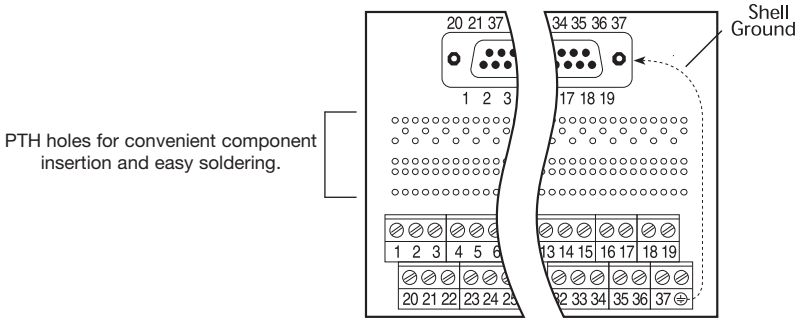

Female Connector SD-F37
37 Pin Socket Female Connector
Shown with component counting holes
(pads are on solder side)

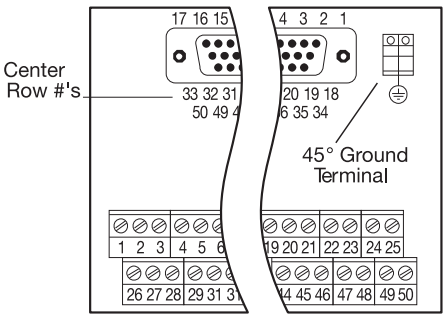

Female Connector SD-F50
50 Pin Socket Female Connector
Shown with no component solder pads

Other models available; please contact Altech.

Suffix	Description
none	Screw Terminal; DIN Rail Mount
/S	Spring Terminal; DIN Rail Mount
/P	Screw Terminal; Panel Mount
/L	Screw Terminal; Long Latch Connector; DIN Rail Mount
/SL	Spring Terminal; Long Latch Connector; DIN Rail Mount
/SP	Spring Terminal; Panel Mount

Example: Part Number 5727.2/L for Long Latch model.

* High density version.
[a] SD-M50 is only available with a 1.5A current rating.
[b] SD-F50 and SD-M50 are double-sided boards and do not have component solder pads.

DATA SUBJECT TO CHANGE WITHOUT NOTICE

DIODE MODULES & COMPONENT CARRIERS

INTERFACES
DM Diode Module
35 or 32mm DIN Rail Mount

Wire individually labeled diodes into existing circuits for freewheeling, DC inductive kick suppression (commutating), reverse DC polarity protection, etc. Use bussed diodes for distribution of logic Vcc or ground, or gather and decouple electrical signals for lamp testing or collective fault messages. Use as commutating diodes across inductive loads such as DC relays, solenoid valves, actuator magnets, etc. to suppress voltage surges.

Standard modules include series connection diode circuits in 1 Amp and 3 Amp versions, and diode gates with bussed anodes or cathodes.

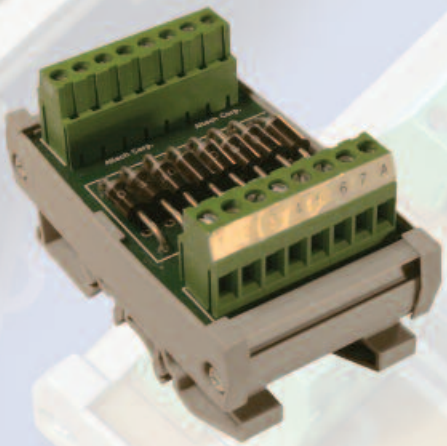

- Screw-Cage Clamp Connections
- Special Configurations Available
- DIN Rail Mount, Panel Mount Available

INTERFACES
Component Carriers
35 or 32mm DIN Rail

Use Component Carriers to modify and/or build circuits to meet special requirements. Type CCA requires removal of the single solder-side printed circuit board from the mounting track for soldering of components. Posts or through-leads can be installed for future field connections. Contact Altech for custom installation of solder posts. Type BSM allows field additions of diodes for decoupling, line crossovers for testing or multiplying tie-in terminals for a line. Pre-installed flat, fork-and-eyelet soldering posts allow component-side mechanical and solder connections with minimum disruption to wiring and mounted devices.

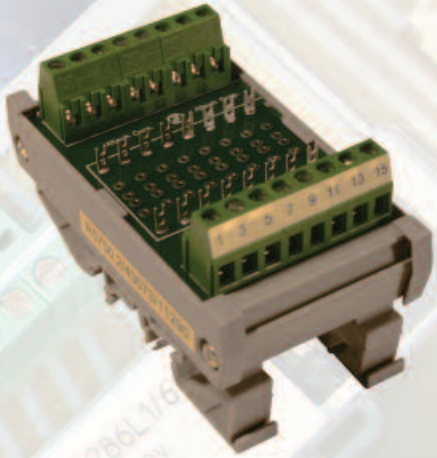

- Screw-Cage Clamp Connections
- Terminal Blocks are Numbered for Easy Wire Identification
- DIN Rail Mount, Panel Mount Available

INTERFACES
Dip Socket Carrier - 3 Amp
35 or 32mm DIN Rail Mount

Enhance design capabilities with Dual In-Line Package (DIP) Socket Carriers, the most versatile socket available. Use our DIPCs for reed-relays, power relays, photo-isolated Input/Output modules, in-line switches, thin film resistors and more. The Altech DIPC is rated 3 Amp and is available in 14, 16 and 20 pin socket configurations. Each DIPC module has several component solder pads for loading circuit-building components.

- Screw-Cage Clamp Connections
- 4 to 5 Component Solder Pads Per Line
- .9mm (.035 in.) Diameter Component Mounting Holes
- DIN Rail Mount, Panel Mount Available

DATA SUBJECT TO CHANGE WITHOUT NOTICE

INTERFACES
DM Diode Module
35 or 32 mm DIN Rail Mount

Technical Information

Diode	Rated Current
1N4007 or equivalent	1A
1N5408 or equivalent	3A
P600M or equivalent	6A

Maximum Blocking Voltage - 1000V DC
Rated Bus Current: 10A
(12A at 30˚C (86˚F) Temperature Rise)
Wire Range .....0.5-4 mm²; 22-12 AWG
Voltage .....250V AC
Torque .....0.5-4 Nm / 4 lbs-in.
Stripping Length ...8 mm

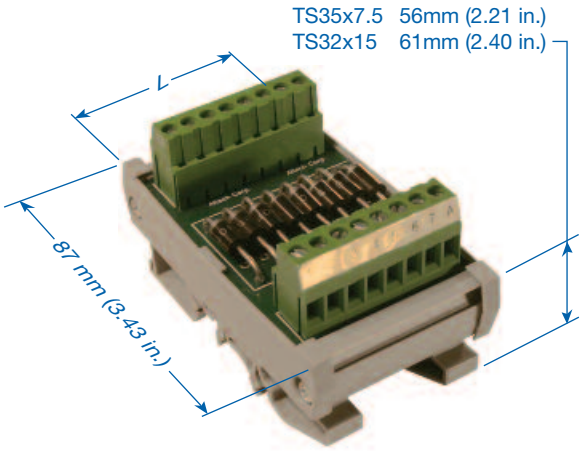

SCREW CLAMP *

1 AMP

Part Number	Type	Ordering Information	No. of Diodes	Diode	Module Length (L) in mm(in.)	Std. Pk.	Figure
8971.2	DM4-S	Series Connection, 1A diodes	4	1N4007	24 (0.95)	1	A
5702.2	DM8-S	Series Connection, 1A diodes	8	1N4007	44 (1.73)	1	A
5703.2	DM12-S	Series Connection, 1A diodes	12	1N4007	64 (2.52)	1	A
8973.2	DM16-S	Series Connection, 1A diodes	16	1N4007	92 (3.62)	1	A
8974.2	DM20-S	Series Connection, 1A diodes	20	1N4007	112 (4.41)	1	A
8975.2	DM24-S	Series Connection, 1A diodes	24	1N4007	132 (5.20)	1	A
8842.2	DM6-A-S	Bussed Anodes, 1A diodes	6	1N4007	30 (1.18)	1	B
5704.2	DM14-A-S	Bussed Anodes, 1A diodes	14	1N4007	50 (1.97)	1	B
5705.2	DM22-A-S	Bussed Anodes, 1A diodes	22	1N4007	70 (2.75)	1	B
8850.2	DM6-K-S	Bussed Cathodes, 1A diodes	6	1N4007	30 (1.18)	1	C
5706.2	DM14-K-S	Bussed Cathodes, 1A diodes	14	1N4007	50 (1.97)	1	C
5707.2	DM22-K-S	Bussed Cathodes, 1A diodes	22	1N4007	70 (2.75)	1	C

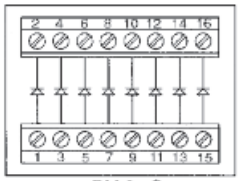

DM 8 - S

Figure A

3 AMP

Part Number	Type	Ordering Information	No. of Diodes	Diode	Module Length (L) in mm(in.)	Std. Pk.	Figure
8971.3	DM4-S3	Series Connection, 3A diodes	4	1N5408	24 (0.95)	1	A
5702.3	DM8-S3	Series Connection, 3A diodes	8	1N5408	44 (1.73)	1	A
5703.3	DM12-S3	Series Connection, 3A diodes	12	1N5408	64 (2.52)	1	A
8973.3	DM16-S3	Series Connection, 3A diodes	16	1N5408	92 (3.62)	1	A
8974.3	DM20-S3	Series Connection, 3A diodes	20	1N5408	112 (4.41)	1	A
8975.3	DM24-S3	Series Connection, 3A diodes	24	1N5408	132 (5.20)	1	A
8842.3	DM6-A-S3	Bussed Anodes, 3A diodes	6	1N5408	30 (1.18)	1	B
5704.3	DM14-A-S3	Bussed Anodes, 3A diodes	14	1N5408	50 (1.97)	1	B
5705.3	DM22-A-S3	Bussed Anodes, 3A diodes	22	1N5408	70 (2.75)	1	B
8850.3	DM6-K-S3	Bussed Cathodes, 3A diodes	6	1N5408	30 (1.18)	1	C
5706.3	DM14-K-S3	Bussed Cathodes, 3A diodes	14	1N5408	50 (1.97)	1	C
5707.3	DM22-K-S3	Bussed Cathodes, 3A diodes	22	1N5408	70 (2.75)	1	C

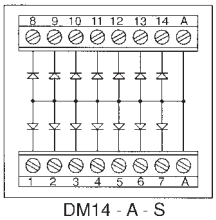

DM14 - A - S

Figure B

6 AMP

Part Number	Type	Ordering Information	No. of Diodes	Diode	Module Length (L) in mm(in.)	Std. Pk.	Figure
8971.4	DM4-S6	Series Connection, 6A diodes	4	P600M	24 (0.95)	1	A
5702.4	DM8-S6	Series Connection, 6A diodes	8	P600M	44 (1.73)	1	A
5703.4	DM12-S6	Series Connection, 6A diodes	12	P600M	64 (2.52)	1	A
8973.4	DM16-S6	Series Connection, 6A diodes	16	P600M	92 (3.62)	1	A
8974.4	DM20-S6	Series Connection, 6A diodes	20	P600M	112 (4.41)	1	A
8975.4	DM24-S6	Series Connection, 6A diodes	24	P600M	132 (5.20)	1	A
8842.4	DM6-A-S6	Bussed Anodes, 6A diodes	6	P600M	30 (1.18)	1	B
5704.4	DM14-A-S6	Bussed Anodes, 6A diodes	14	P600M	50 (1.97)	1	B
5705.4	DM22-A-S6	Bussed Anodes, 6A diodes	22	P600M	70 (2.75)	1	B
8850.4	DM6-K-S6	Bussed Cathodes, 6A diodes	6	P600M	30 (1.18)	1	C
5706.4	DM14-K-S6	Bussed Cathodes, 6A diodes	14	P600M	50 (1.97)	1	C
5707.4	DM22-K-S6	Bussed Cathodes, 6A diodes	22	P600M	70 (2.75)	1	C

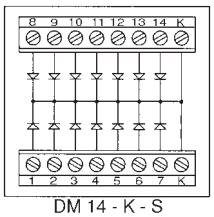

DM 14 - K - S

Figure C

* Spring Terminal is available; add suffix S to end of part number. Example: Part Number 8971.2/S for Spring Terminal.

DATA SUBJECT TO CHANGE WITHOUT NOTICE

INTERFACES
CCA Component Carrier 35 or 32 mm DIN Rail Mount with PTH holes

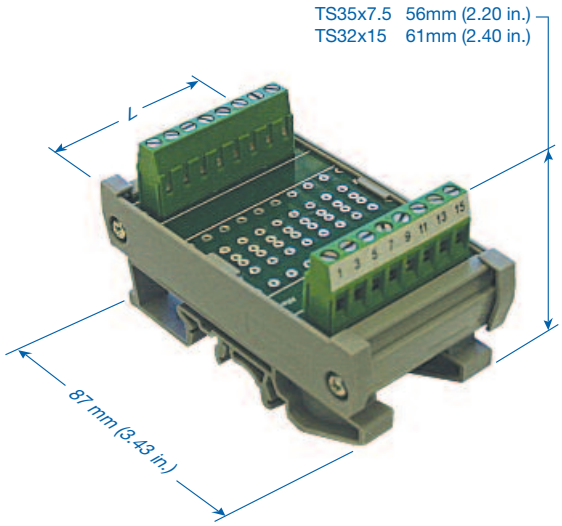

Technical Information

Current .....6 A (12 A Bus)
Terminal.....15 A
Voltage .....250V AC
Wire Range .....0.5-4 mm^2 / 22-12 AWG
Torque .....0.5-4 Nm / 4 lbs-in.
Stripping Length ...8 mm

SCREW CLAMP

Part Number	Type	No. of Poles	Module Length (L) in mm(in.)	Std. Pk.
8835.2	CCA4	4	24 (.87)	1
8836.2	CCA8	8	44 (1.65)	1
8837.2	CCA12	12	64 (2.44)	1
8838.2	CCA16	16	84 (3.23)	1
8839.2	CCA20	20	104 (4.02)	1
8840.2	CCA24	24	124 (4.80)	1

SPRING CLAMP

Part Number	Type	No. of Poles	Module Length (L) in mm(in.)	Std. Pk.
8835.2/S	CCA4	4	24 (.87)	1
8836.2/S	CCA8	8	44 (1.65)	1
8837.2/S	CCA12	12	64 (2.44)	1
8838.2/S	CCA16	16	84 (3.23)	1
8839.2/S	CCA20	20	104 (4.02)	1
8840.2/S	CCA24	24	124 (4.80)	1

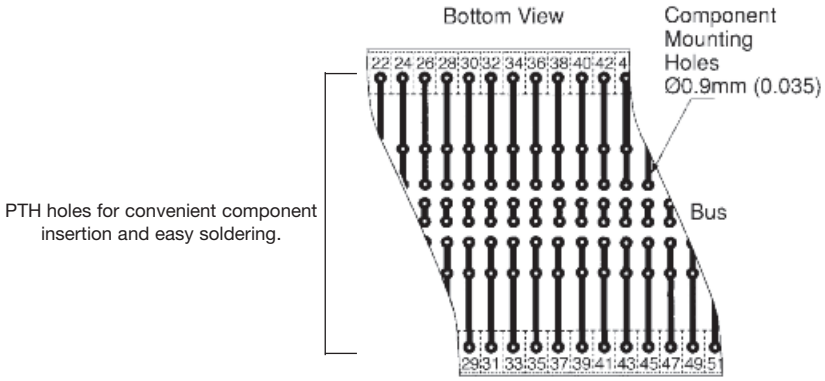

CCA Type

DATA SUBJECT TO CHANGE WITHOUT NOTICE

INTERFACES
BSM Component Carrier 35 or 32 mm DIN Rail Mount with solder posts

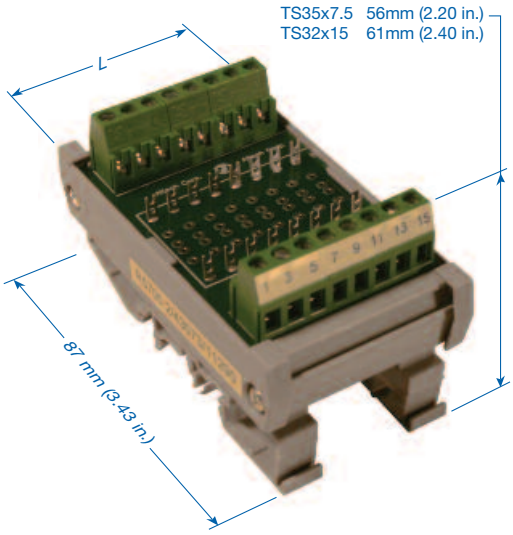

Technical Information

Current .....6 A (12 A Bus)
Terminal.....15 A
Voltage .....250V AC
Wire Range .....0.5-4 mm^2 / 22-14 AWG
Torque .....0.5-4 Nm / 4 lbs-in.
Stripping Length ...8 mm

SCREW CLAMP

Part Number	Type	No. of Poles	Module Length (L) in mm(in.)	Std. Pk.
5700.2	BSM8-S	16	47 (1.85)	1
5701.2	BSM12-S	24	69 (2.72)	1

SPRING CLAMP

Part Number	Type	No. of Poles	Module Length (L) in mm(in.)	Std. Pk.
5700.2/S	BSM8-S	16	47 (1.85)	1
5701.2/S	BSM12-S	24	69 (2.72)	1

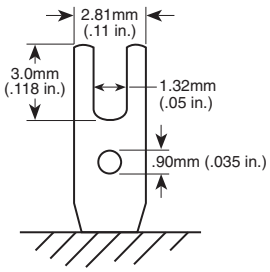

Solder Post

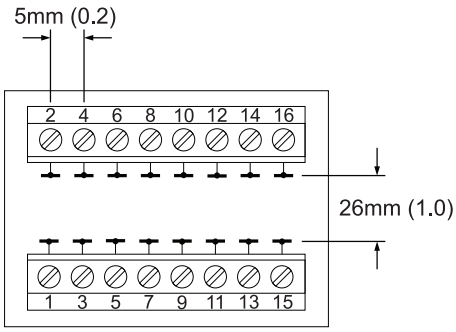

BSM Type

DATA SUBJECT TO CHANGE WITHOUT NOTICE

INTERFACES
Dip Socket Carrier - 3 Amp
35 or 32mm DIN Rail Mount

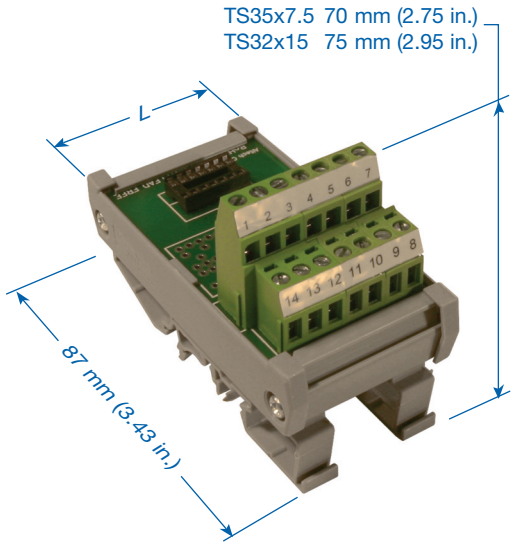

Typical Applications:
14 Pin
Magnecraft® Classes 107, 171, 172;
S-D® Series MRR-D; Hamlin® 700;
Dale® TDP14 Resistors; etc.
16 Pin
Most P&B® including T85 Hi Sens and
I/O Modules IA, OA, OD16;
Midtex® 190 Power;
Augat® Alcoswitch® GD, AD Series, etc.
20 Pin
C&K® BD series switches;
Grayhill® 79 coded switches;
AMP® 7600 shunts; etc.

Technical Information

Current .....3 A[a]
Voltage .....250V AC
Wire Range .....0.5-4 mm^2 / 22-12 AWG
Torque .....0.5-4 Nm / 4 lbs-in.
Stripping Length ...8 mm

SCREW CLAMP

Part Number	Type	No. of Poles	Module Length (L) in mm(in.)	Std. Pk.
8937.2	DIPC14	14	45 (1.77)	1
8938.2	DIPC16	16	68 (2.68)	1
8939.2	DIPC20	20	68 (2.68)	1

SPRING CLAMP

Part Number	Type	No. of Poles	Module Length (L) in mm(in.)	Std. Pk.
8937.2/S	DIPC14	14	45 (1.77)	1
8938.2/S	DIPC16	16	56 (2.20)	1
8939.2/S	DIPC20	20	56 (2.20)	1

PTH holes for convenient component insertion and easy soldering.

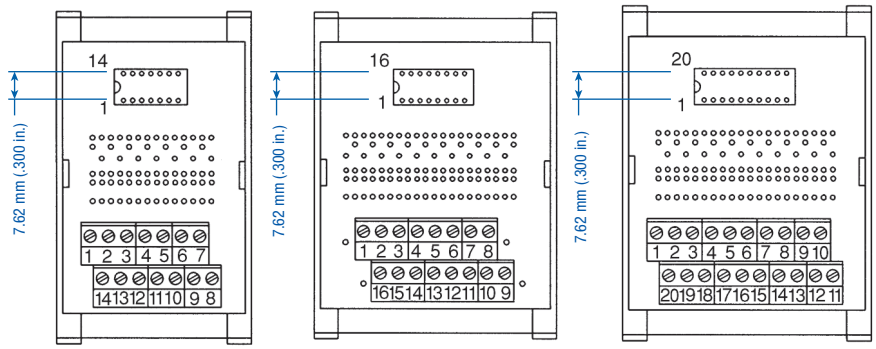

[a] Current Ratings
Printed Circuit Traces: 3.5A
Terminal Blocks: 15A
Dip Socket: 3A

DATA SUBJECT TO CHANGE WITHOUT NOTICE

RJ45 INTERFACES CONNECTOR-TO-WIRE
35 or 32mm DIN Rail Mount

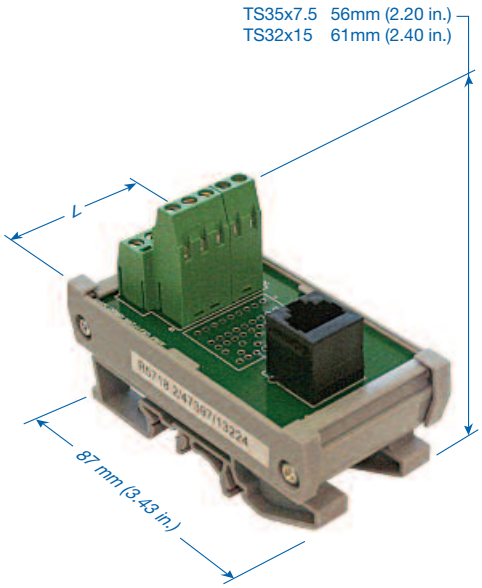

Technical Information

Current .....1.5 A
Voltage .....150V AC
Wire Range .....0.5-4 mm^2 / 20-12 AWG
Torque .....0.5-4 Nm / 4 lbs-in.
Stripping Length ...8 mm

SCREW CLAMP - VERTICAL - Top Entry

Part Number	Type	No. of Poles	Module Length (L) in mm(in.)	Std. Pk.
5718.2	RJ45	8	36 (1.42)	1
5719.2	RJ45 Shielded	8 + 2 shield	36 (1.42)	1

SCREW CLAMP - HORIZONTAL - Side Entry

5718.3	RJ45	8	36 (1.42)	1
5719.3	RJ45 Shielded	8 + 2 shield	36 (1.42)	1

SPRING CLAMP - VERTICAL - Top Entry

Part Number	Type	No. of Poles	Module Length (L) in mm(in.)	Std. Pk.
5718.2/S	RJ45	8	36 (1.42)	1
5719.2/S	RJ45 Shielded	8 + 2 shield	36 (1.42)	1

SPRING CLAMP - HORIZONTAL - Side Entry

5718.3/S	RJ45	8	36 (1.42)	1
5719.3/S	RJ45 Shielded	8 + 2 shield	36 (1.42)	1

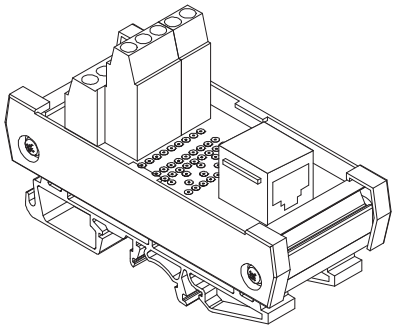

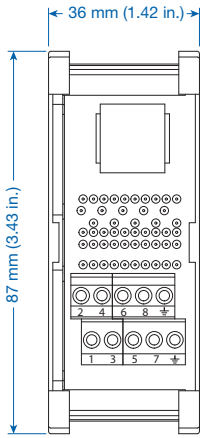

With Horizontal - Side Entry
RJ45 Connector

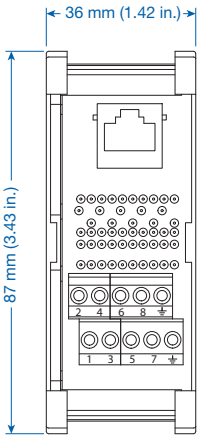

With Vertical - Top Entry
RJ45 Connector

DATA SUBJECT TO CHANGE WITHOUT NOTICE

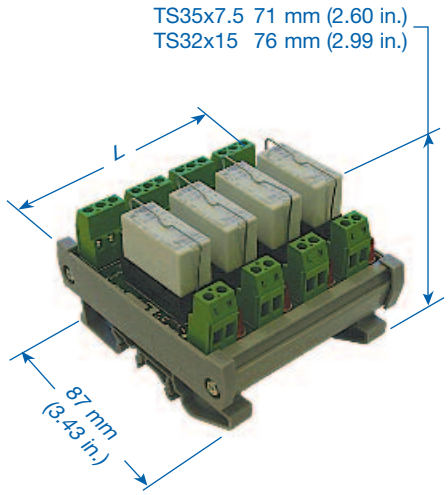

RC1 / RM1 SPDT (Single Pole Double Throw)

Isolated channels (no bus) allow control of each relay by a different logic system, if necessary. Mix sourcing (positive switching, Vcc on/off) and sinking (negative switching, ground on/off) on a single multi-relay module. Provide spare relay channels for future needs without committing to a specific logic power supply, and without committing coil-drive power for more than one relay at a time.

Altech Relay Modules provide high density packaging of miniature general purpose relays with Single Pole Double Throw (Form C) and Double Pole Double Throw (2 Form C) contact configurations and low current AC and DC coils. Load your own relays in our RC Relay Carrier, or order the RM Relay Module complete with relays.

Call us with your custom module requirements!

- Screw-Cage Clamp Connections
- Spring Clamp Terminals
- LED Coil Voltage Indicator
- Reverse DC Polarity LED Protection
- Surge Suppression with DC Coil
- DIN Rail Mount, Panel Mount Available

Technical Information

Current .....12 A
Voltage (max) .....250V AC / 24V DC
Wire Range .....0.5-4 mm^2 / 30-14 AWG
Torque .....0.5-4 Nm / 4 lbs-in.
Stripping Length ...8 mm

SPDT

		Screw terminal		Spring terminal		
Number of Channels	Coil Voltage	Carrier Only Part Number	Module with Relays Part Number	Carrier Only Part Number	Module with Relays Part Number	Module Length (L) in mm (in)
1 Channel	12V DC	8929.5	8929.2	8929.5/S	8929.2/S	21 (0.83)
	24V DC	8933.5	8933.2	8933.5/S	8933.2/S	21 (0.83)
	110V AC	8935.5	8935.2	8935.5/S	8935.2/S	21 (0.83)
	220V AC	8940.5	8940.2	8940.5/S	8940.2/S	21 (0.83)
2 Channel	12V DC	8929.6	8929.3	8929.6/S	8929.3/S	40 (1.57)
	24V DC	8933.6	8933.3	8933.6/S	8933.3/S	40 (1.57)
	110V AC	8935.6	8935.3	8935.6/S	8935.3/S	40 (1.57)
	220V AC	8940.6	8940.3	8940.6/S	8940.3/S	40 (1.57)
4 Channel	12V DC	8931.5	8931.2	8931.5/S	8931.2/S	79 (3.11)
	24V DC	8941.5	8941.2	8941.5/S	8941.2/S	79 (3.11)
	110V AC	8942.5	8942.2	8942.5/S	8942.2/S	79 (3.11)
	220V AC	8943.5	8943.2	8943.5/S	8943.2/S	79 (3.11)
8 Channel	12V DC	8931.6	8931.3	8931.6/S	8931.3/S	157 (6.18)
	24V DC	8941.6	8941.3	8941.6/S	8941.3/S	157 (6.18)
	110V AC	8942.6	8942.3	8942.6/S	8942.3/S	157 (6.18)
	220V AC	8943.6	8943.3	8943.6/S	8943.3/S	157 (6.18)
16 Channel	12V DC	8932.5	8932.2	8932.5/S	8932.2/S	311 (12.24)
	24V DC	8944.5	8944.2	8944.5/S	8944.2/S	311 (12.24)
	110V AC	8946.5	8946.2	8946.5/S	8946.2/S	311 (12.24)
	220V AC	8948.5	8948.2	8948.5/S	8948.2/S	311 (12.24)

DATA SUBJECT TO CHANGE WITHOUT NOTICE

CONTACT SPECIFICATIONS*

SPDT Composite Rating 12A
Relay Socket.....12A
Terminal Block 15A
PCB Trace for Contact Circuit
at 30°C (86°F) temperature rise NC.....12A
Common and NO 16A
PCB Trace for Coil Circuit
at 30°C (86°F) temperature rise 6A
Relay Contact Material.....AgNi
Rated load (capacity) .....12A at 250VAC / 24VDC
Min. switching voltage .....5 V
Min. switching current 5mA
Min. breaking capacity.....0.3W

COIL SPECIFICATIONS*

Ambient Temperature..... -40°C-+85°C (-40°F-+185°F)

Coil Voltage AC / DC	Coil operating range V AC / DC		Coil Current in mA	Coil resistance at 20°C in Ω	Acceptable resistance
	Min.	Max.			
12 VDC	8.4	30.6	40	360	± 10 %
24 VDC	16.8	61.2	20	1440	± 10 %
110 VAC	88	132	4.4	8900	± 10 %
220 VAC	176	264	2.2	35500	± 10 %

RELAY PINOUT*

SPDT

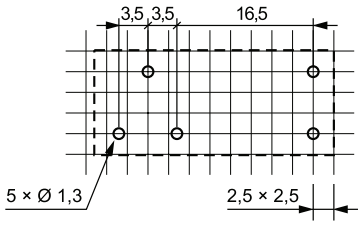

CONTACT CIRCUITS*

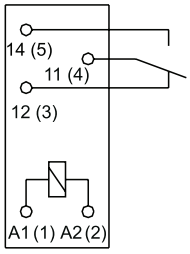

SPDT

COIL CIRCUITS

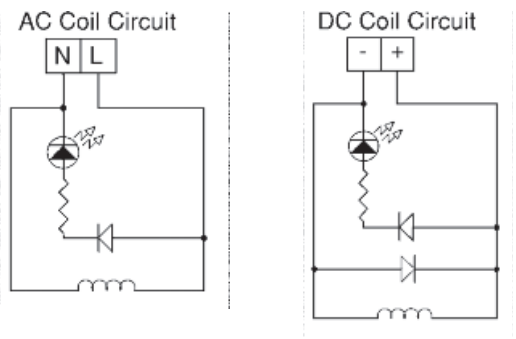

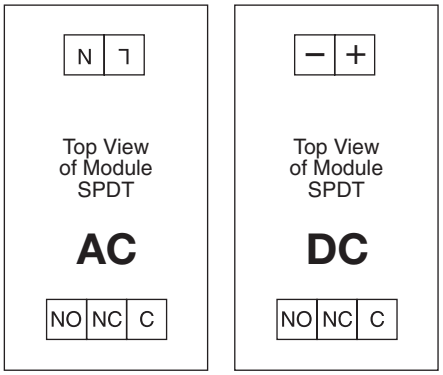

SPDT

* For more information please see page 76 (Relay RM87)

DATA SUBJECT TO CHANGE WITHOUT NOTICE

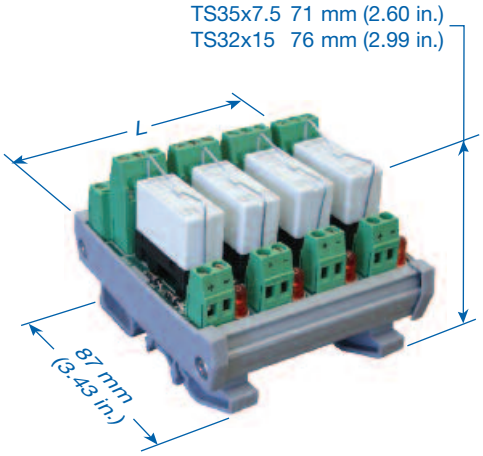

RC2 / RM2 (Double Pole Double Throw)

Isolated channels (no bus) allow control of each relay by a different logic system, if necessary. Mix sourcing (positive switching, Vcc on/off) and sinking (negative switching, ground on/off) on a single multi-relay module. Provide spare relay channels for future needs without committing to a specific logic power supply, and without committing coil-drive power for more than one relay at a time.

Altech Relay Modules provide high density packaging of miniature general purpose relays with Single Pole Double Throw (Form C) and Double Pole Double Throw (2 Form C) contact configurations and low current AC and DC coils. Load your own relays in our RC Relay Carrier, or order the RM Relay Module complete with relays.

Call us with your custom module requirements!

- Screw-Cage Clamp Connections
- Spring Clamp Terminals
- LED Coil Voltage Indicator
- Reverse DC Polarity LED Protection
- Surge Suppression with DC Coil
- DIN Rail Mount, Panel Mount Available

Technical Information

Current .....8 A
Voltage (max) .....250V AC / 24V DC
Wire Range .....0.5-4 mm^2 / 30-14 AWG
Torque .....0.5-4 Nm / 4 lbs-in.
Stripping Length ...8 mm

DPDT

Number of Channels	Coil Voltage	Screw terminal Carrier Only Part Number	Screw terminal Module with Relays Part Number	Spring terminal Carrier Only Part Number	Spring terminal Module with Relays Part Number	Module Length (L) in mm (in)
1 Channel	12V DC	8945.5	8945.2	8945.5/S	8945.2/S	21 (0.83)
	24V DC	8951.5	8951.2	8951.5/S	8951.2/S	21 (0.83)
	110V AC	8953.5	8953.2	8953.5/S	8953.2/S	21 (0.83)
	220V AC	8954.5	8954.2	8954.5/S	8954.2/S	21 (0.83)
2 Channel	12V DC	8949.6	8949.3	8949.6/S	8949.3/S	40 (1.57)
	24V DC	8951.6	8951.3	8951.6/S	8951.3/S	40 (1.57)
	110V AC	8953.6	8953.3	8953.6/S	8953.3/S	40 (1.57)
	220V AC	8954.6	8954.3	8954.6/S	8954.3/S	40 (1.57)
4 Channel	12V DC	8955.5	8955.2	8955.5/S	8955.2/S	79 (3.11)
	24V DC	8956.5	8956.2	8956.5/S	8956.2/S	79 (3.11)
	110V AC	8957.5	8957.2	8957.5/S	8957.2/S	79 (3.11)
	220V AC	8959.5	8959.2	8959.5/S	8959.2/S	79 (3.11)
8 Channel	12V DC	8955.6	8955.3	8955.6/S	8955.3/S	157 (6.18)
	24V DC	8956.6	8956.3	8956.6/S	8956.3/S	157 (6.18)
	110V AC	8957.6	8957.3	8957.6/S	8957.3/S	157 (6.18)
	220V AC	8959.6	8959.3	8959.6/S	8959.3/S	157 (6.18)
16 Channel	12V DC	8963.5	8963.2	8963.5/S	8963.2/S	311 (12.24)
	24V DC	8972.5	8972.2	8972.5/S	8972.2/S	311 (12.24)
	110V AC	8995.5	8995.2	8995.5/S	8995.2/S	311 (12.24)
	220V AC	8999.5	8999.2	8999.5/S	8999.2/S	311 (12.24)

DATA SUBJECT TO CHANGE WITHOUT NOTICE

CONTACT SPECIFICATIONS*

DPDT Rating 8A
Relay Socket.....8A
Terminal Block.....15A
PCB Trace for Contact Circuit
at 30°C (86°F) temperature rise NC.....10A
PCB Trace for Coil Circuit
at 30°C (86°F) temperature rise 2A
Relay Contact Material.....AgNi
Rated load (capacity) .....8A at 250VAC / 24VDC
Min. switching voltage .....5 V
Min. switching current 5mA
Min. breaking capacity.....0.3W

COIL SPECIFICATIONS*

Ambient Temperature..... -40°C-+85°C (-40°F-+185°F)

Coil Voltage AC / DC	Coil operating range V AC / DC		Coil Current in mA	Coil resistance at 20°C in Ω	Acceptable resistance
	Min.	Max.			
12 VDC	8.4	30.6	40	360	± 10 %
24 VDC	16.8	61.2	20	1440	± 10 %
110 VAC	88	132	4.4	8900	± 10 %
220 VAC	176	264	2.2	35500	± 10 %

RELAY PINOUT*

SPDT

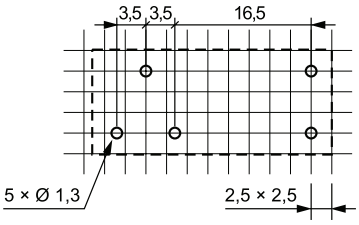

CONTACT CIRCUITS*

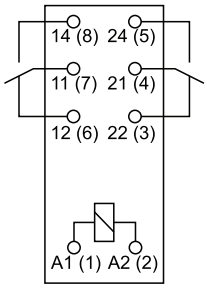

DPDT

COIL CIRCUITS

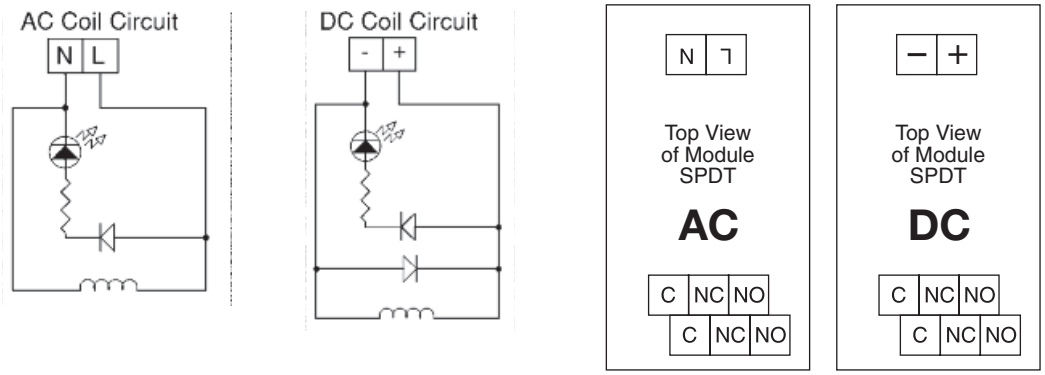

DPDT

* For more information please see page 76 (Relay RM84)

DATA SUBJECT TO CHANGE WITHOUT NOTICE

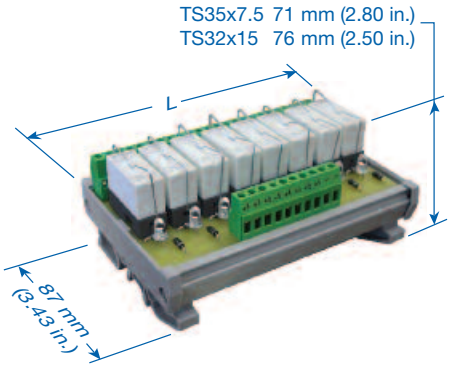

RC1 / RM1 (Single Pole Double Throw)

Altech Bussed Relay Modules provide high density packaging of miniature general purpose relays with minimal hook-up wiring. Select from bussed DC Positive (DC Negative switching), bussed DC Negative (DC Positive switching), or bussed AC neutral.

Ideal for traditional mechanical relay input/output array between a single logic system and peripheral devices, or between logic systems in a network as well as their peripheral and field devices.

Load your own relays in our RCB Relay Carrier, or order the RMB Relay Module complete with 8 or 16 relays.

Call us with your custom module requirements!

- Screw-Cage Clamp Connections
- Spring Clamp Terminals
- LED Coil Voltage Indicator
- Reverse DC Polarity LED Protection
- Surge Suppression With DC Coil
- DIN Rail Mount, Panel Mount Available

Technical Information

Current .....12 A
Voltage (max) .....250V AC / 24V DC
Wire Range .....0.5-4 mm^2 / 30-14 AWG
Torque .....0.5-4 Nm / 4 lbs-in.
Stripping Length ...8 mm

SPDT

Number of Channels	Coil Voltage	Screw terminal Carrier Only Part Number	Screw terminal Module with Relays Part Number	Spring terminal Carrier Only Part Number	Spring terminal Module with Relays Part Number	Module Length (L) in mm (in)
8 Channel, Bussed DC+	12V DC (E)	8912.5	8912.2	8912.5/S	8912.2/S	125 (4.92)
	24V DC (G)	5494.5	5494.2	5494.5/S	5494.2/S	125 (4.92)
8 Channel, Bussed DC-	12V DC (E)	8912.6	8912.3	8912.6/S	8912.3/S	125 (4.92)
	24V DC (G)	5492.5	5492.2	5492.5/S	5492.2/S	125 (4.92)
8 Channel, Bussed AC (N)	110V AC (U)	5502.5	5502.2	5502.5/S	5502.2/S	125 (4.92)
	220V AC (X)	8913.6	8913.3	8913.6/S	8913.3/S	125 (4.92)
16 Channel, Bussed DC+	12V DC (E)	8914.5	8914.2	8914.5/S	8914.2/S	248 (9.76)
	24V DC (G)	5508.5	5508.2	5508.5/S	5508.2/S	248 (9.76)
16 Channel, Bussed DC-	12V DC (E)	8921.5	8921.2	8921.5/S	8921.2/S	248 (9.76)
	24V DC (G)	5506.5	5506.2	5506.5/S	5506.2/S	248 (9.76)
16 Channel, Bussed AC(N)	110V AC (U)	5514.5	5514.2	5514.5/S	5514.2/S	248 (9.76)
	220V AC (X)	5514.6	5514.3	5514.6/S	5514.3/S	248 (9.76)

DATA SUBJECT TO CHANGE WITHOUT NOTICE

CONTACT SPECIFICATIONS*

SPDT Composite Rating 12A
Relay Socket.....12A
Terminal Block 15A
PCB Trace for Contact Circuit
at 30°C (86°F) temperature rise NC.....12A
PCB Trace for Coil Circuit
at 30°C (86°F) temperature rise 4A
PCB Trace for Bus
at 30°C (86°F) temperature rise 16A
Relay Contact Material.....AgNi
Rated load (capacity) .....12A at 250VAC / 24VDC
Min. switching voltage .....5 V
Min. switching current 5mA
Min. breaking capacity.....0.3W

RELAY PINOUT*

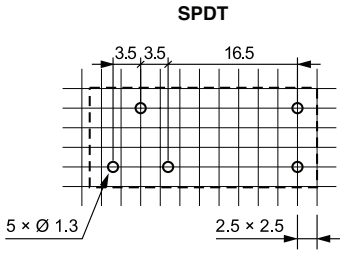

COIL SPECIFICATIONS*

Ambient Temperature..... -40°C-+85°C (-40°F-+185°F)

Coil Voltage AC / DC	Coil operating range V AC / DC		Coil Current in mA	Coil resistance at 20°C in Ω	Acceptable resistance
	Min.	Max.			
12 VDC	8.4	30.6	40	360	± 10 %
24 VDC	16.8	61.2	20	1440	± 10 %
110 VAC	88	132	4.4	8900	± 10 %
220 VAC	176	264	2.2	35500	± 10 %

CONTACT CIRCUITS*

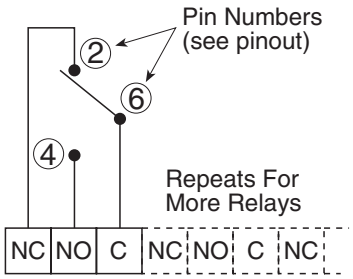

COIL CIRCUITS

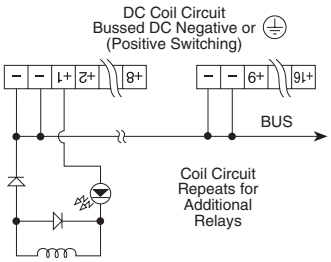

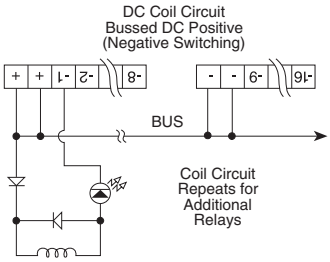

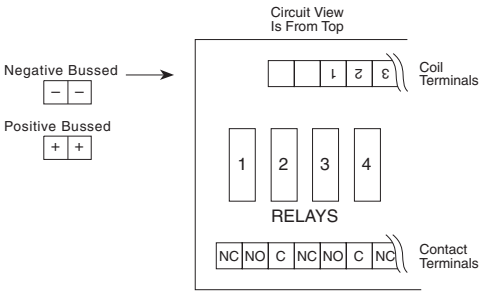

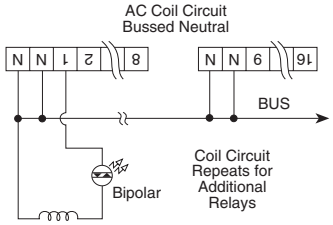

* For more information please see page 76 (Relay RM87)

DATA SUBJECT TO CHANGE WITHOUT NOTICE

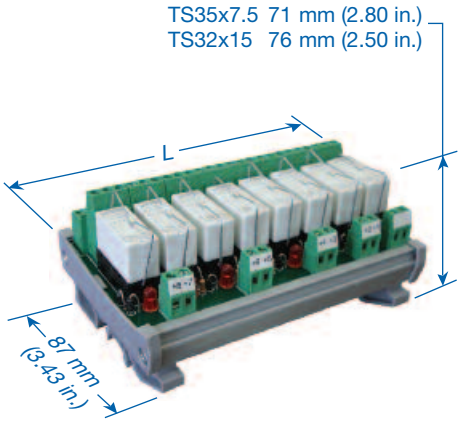

RC2 / RM2 (Double Pole Double Throw)

Altech Bussed Relay Modules provide high density packaging of miniature general purpose relays with minimal hook-up wiring. Select from bussed DC Positive (DC Negative switching), bussed DC Negative (DC Positive switching), or bussed AC neutral.

Ideal for traditional mechanical relay input/output array between a single logic system and peripheral devices, or between logic systems in a network as well as their peripheral and field devices.

Load your own relays in our RCB Relay Carrier, or order the RMB Relay Module complete with 8 or 16 relays.

Call us with your custom module requirements!

- Screw-Cage Clamp Connections
- Spring Clamp Terminals
- LED Coil Voltage Indicator
- Reverse DC Polarity LED Protection
- Surge Suppression With DC Coil
- DIN Rail Mount, Panel Mount Available

Technical Information

Current .....8 A
Voltage (max) .....250V AC / 24V DC
Wire Range .....0.5-4 mm^2 / 30-14 AWG
Torque .....0.5-4 Nm / 4 lbs-in.
Stripping Length ...8 mm

DPDT

Number of Channels	Coil Voltage	Screw terminal Carrier Only Part Number	Screw terminal Module with Relays Part Number	Spring terminal Carrier Only Part Number	Spring terminal Module with Relays Part Number	Module Length (L) in mm (in)
8 Channel, Bussed DC+	12V DC (E)	8923.5	8923.2	8923.5/S	8923.2/S	125 (4.92)
	24V DC (G)	8924.5	8924.2	8924.5/S	8924.2/S	125 (4.92)
8 Channel, Bussed DC-	12V DC (E)	8923.6	8923.3	8923.6/S	8923.3/S	125 (4.92)
	24V DC (G)	8924.6	8924.4	8924.6/S	8924.4/S	125 (4.92)
8 Channel, Bussed AC (N)	110V AC (U)	8925.5	8925.2	8925.5/S	8925.2/S	125 (4.92)
	220V AC (X)	8925.6	8925.3	8925.6/S	8925.3/S	125 (4.92)
16 Channel, Bussed DC+	12V DC (E)	8926.5	8926.2	8926.5/S	8926.2/S	248 (9.76)
	24V DC (G)	8926.6	8926.3	8926.6/S	8926.3/S	248 (9.76)
16 Channel, Bussed DC-	12V DC (E)	8927.5	8927.2	8927.5/S	8927.2/S	248 (9.76)
	24V DC (G)	8927.6	8927.3	8927.6/S	8927.3/S	248 (9.76)
16 Channel, Bussed AC(N)	110V AC (U)	8928.5	8928.2	8928.5/S	8928.2/S	248 (9.76)
	220V AC (X)	8928.6	8928.3	8928.6/S	8928.3/S	248 (9.76)

DATA SUBJECT TO CHANGE WITHOUT NOTICE

CONTACT SPECIFICATIONS*

DPDT Rating 8A
Relay Socket.....8A
Terminal Block.....15A
PCB Trace for Contact Circuit
at 30°C (86°F) temperature rise NC.....8A
PCB Trace for Coil Circuit
at 30°C (86°F) temperature rise 2A
PCB Trace for Bus
at 30°C (86°F) temperature rise 16A
Relay Contact Material.....AgNi
Rated load (capacity) .....8A at 250VAC / 24VDC
Min. switching voltage.....5 V
Min. switching current.....5mA
Min. breaking capacity.....0.3W

RELAY PINOUT*

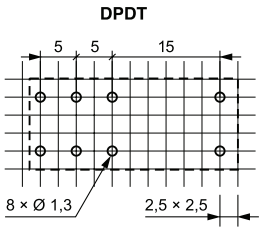

COIL SPECIFICATIONS*

Ambient Temperature..... -40°C-+85°C (-40°F-+185°F)

Coil Voltage AC / DC	Coil operating range V AC / DC		Coil Current in mA	Coil resistance at 20°C in Ω	Acceptable resistance
	Min.	Max.			
12 VDC	8.4	30.6	40	360	± 10 %
24 VDC	16.8	61.2	20	1440	± 10 %
110 VAC	88	132	4.4	8900	± 10 %
220 VAC	176	264	2.2	35500	± 10 %

CONTACT CIRCUITS*

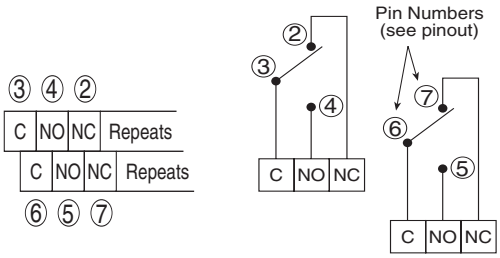

COIL CIRCUITS

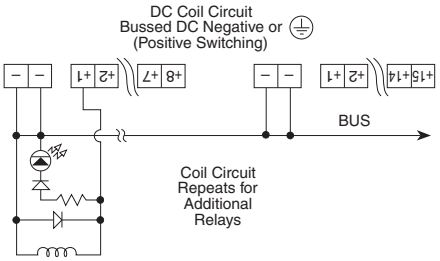

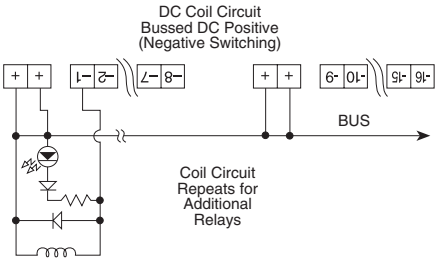

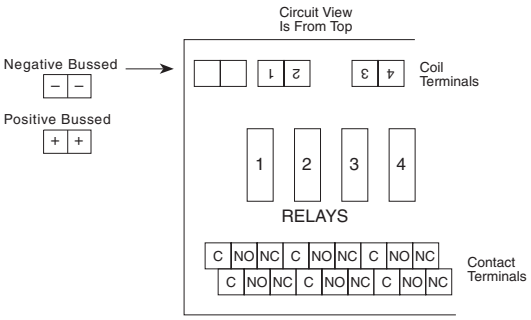

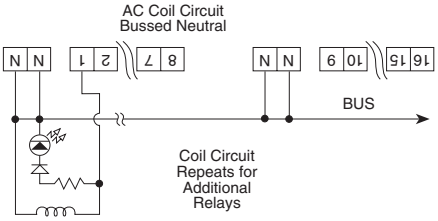

* For more information please see page 76 (Relay RM84)

DATA SUBJECT TO CHANGE WITHOUT NOTICE

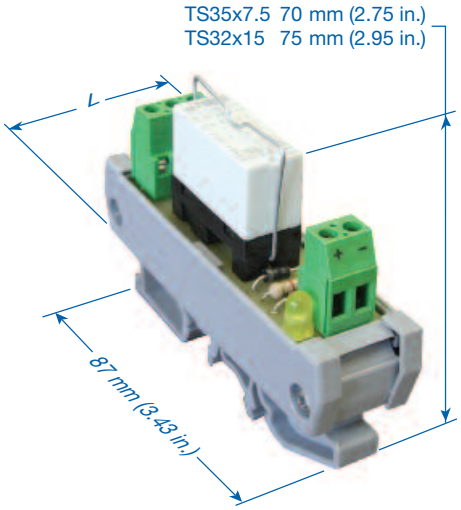

RMH1 - 1 Channel (Single Pole Double Throw)

A true high-current rating in a DIN Rail mount miniature relay module. The miniature relays used in the Altech RMH have a SPDT (Form C) 16 Amp continuous current rating, developed from dual 8 Amp contacts that are internally connected in parallel. The relay socket is rated dual 8 Amp. Printed circuit traces are balanced, rated 16 Amp and connect to Altech terminal blocks UL rated 15A/300V.

Typical relay specifications combined with other module component ratings give module ratings suitable for many control applications.

- Screw-Cage Clamp Connection
- Spring Clamp Terminals
- LED Coil Voltage Indicator
- Reverse DC Polarity LED Protection
- Surge Suppression With DC Coils
- Industry Standard Relays[a]
- DIN Rail Mount, Panel Mount Available

Technical Information

Current .....16 A
Voltage (max) .....250V AC / 24V DC
Wire Range .....0.5-4 mm^2 / 30-14 AWG
Torque .....0.5-4 Nm / 4 lbs-in.
Stripping Length ...8 mm

SPDT DC	Coil Voltage	Screw terminal Part Number	Spring terminal Part Number	LED (2mA)	Module Length (L) in mm (in)
1 Channel	5V DC	8905.2	8905.2/S	Yellow	21 (0.83)
1 Channel	6V DC	8906.2	8906.2/S	Green	21 (0.83)
1 Channel	12V DC	8907.2	8907.2/S	Red	21 (0.83)
1 Channel	24V DC	5800.2	5800.2/S	Yellow	21 (0.83)
1 Channel	48V DC	5802.2	5802.2/S	Green	21 (0.83)
1 Channel	60V DC	8908.2	8908.2/S	Red	21 (0.83)
1 Channel	110V DC	5803.2	5803.2/S	Red	21 (0.83)

SPDT AC	Coil Voltage	Screw terminal Part Number	Spring terminal Part Number	LED (2mA)	Module Length (L) in mm (in)
1 Channel	6V AC	8909.2	8909.2/S	Green	21 (0.83)
1 Channel	12V AC	8910.2	8910.2/S	Red	21 (0.83)
1 Channel	24V AC	5801.2	5801.2/S	Red	21 (0.83)
1 Channel	50V AC	8911.2	8911.2/S	Red	21 (0.83)
1 Channel	110V AC	5804.2	5804.2/S	Yellow	21 (0.83)
1 Channel	220V AC	5805.2	5805.2/S	Green	21 (0.83)
1 Channel	240V AC	5806.2	5806.2/S	Red	21 (0.83)

DATA SUBJECT TO CHANGE WITHOUT NOTICE

GENERAL RELAY SPECIFICATIONS*

Mechanical Life (cycles).....> 3 x 10^7
Max operating frequency
- at rated load.....600 cycles/hour
- no load .....72000 cycles/hour

Operating / release time .....7 ms/ 3 ms

COIL SPECIFICATIONS*

Contact material .....AgNi
Rated load (capacity) .....16A at 250V AC / 24 V DC
Max. breaking capacity.....4000 VA
Min. breaking capacity.....0.3 W
Electrical life (resistive AC1).....> 0.7 x 10^5

Coil Voltage AC / DC	Coil operating range V AC / DC		Coil Current in mA	Coil resistance at 20°C in Ω	Acceptable resistance
	Min.	Max.			
5.0	3.5	12.7	96.0	60.0	± 10 %
6.0	4.2	15.3	80.0	90.0	± 10 %
12.0	8.4	30.6	40.0	360.0	± 10 %
24.0	16.8	61.2	20.0	1,440.0	± 10 %
48.0	33.6	122.4	10.0	5,700.0	± 10 %
60.0	42.0	153.0	8.0	7,500.0	± 10 %
110.0	77.0	280.0	4.4	25,200.0	± 10 %

RELAY PINOUT*

SPDT

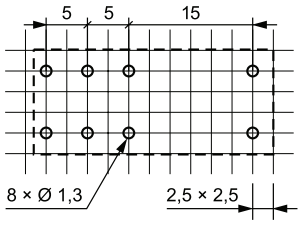

CONTACT CIRCUITS*

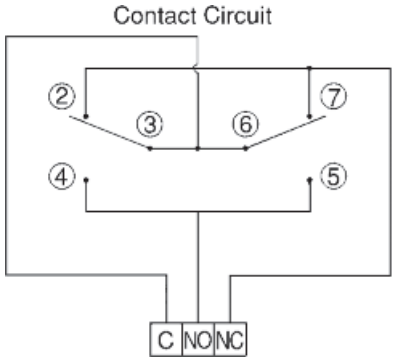

COIL CIRCUITS

AC COIL CIRCUIT

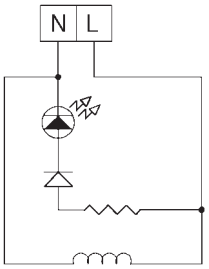

DC COIL CIRCUIT

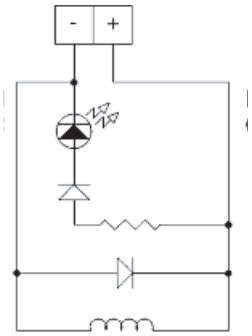

* For more information please see page 76 (Relay RM85)

DATA SUBJECT TO CHANGE WITHOUT NOTICE

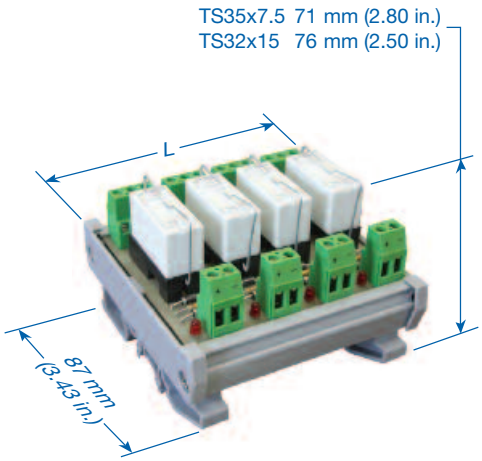

RMH4 - 4 Channel (Single Pole Double Throw)

A true high-current rating in a DIN Rail mount miniature relay module. The miniature relays used in the Altech RMH have a SPDT (Form C) 16 Amp continuous current rating, developed from dual 8 Amp contacts that are internally connected in parallel. The relay socket is rated dual 8 Amp. Printed circuit traces are balanced, rated 16 Amp and connect to Altech terminal blocks UL rated 15A/300V.

Typical relay specifications combined with other module component ratings give module ratings suitable for many control applications.

- Screw-Cage Clamp Connection
- Spring Clamp Terminals
- LED Coil Voltage Indicator
- Reverse DC Polarity LED Protection
- Surge Suppression With DC Coils
- Industry Standard Relays[a]
- DIN Rail Mount, Panel Mount Available

Technical Information

Current .....16 A
Voltage (max) .....250V AC / 24V DC
Wire Range .....0.5-4 mm^2 / 30-14 AWG
Torque .....0.5-4 Nm / 4 lbs-in.
Stripping Length ...8 mm

SPDT DC	Coil Voltage	Screw terminal Part Number	Spring terminal Part Number	LED (2mA)	Module Length (L) in mm (in)
4 Channel	5V DC	8905.3	8905.3/S	Yellow	79 (3.11)
4 Channel	6V DC	8906.3	8906.3/S	Green	79 (3.11)
4 Channel	12V DC	8907.3	8907.3/S	Red	79 (3.11)
4 Channel	24V DC	5800.3	5800.3/S	Yellow	79 (3.11)
4 Channel	48V DC	5802.3	5802.3/S	Green	79 (3.11)
4 Channel	60V DC	8908.3	8908.3/S	Red	79 (3.11)
4 Channel	110V DC	5803.3	5803.3/S	Red	79 (3.11)

SPDT AC	Coil Voltage	Screw terminal Part Number	Spring terminal Part Number	LED (2mA)	Module Length (L) in mm (in)
4 Channel	6V AC	8909.3	8909.3/S	Green	79 (3.11)
4 Channel	12V AC	8910.3	8910.3/S	Red	79 (3.11)
4 Channel	24V AC	5801.3	5801.3/S	Red	79 (3.11)
4 Channel	50V AC	8911.3	8911.3/S	Red	79 (3.11)
4 Channel	110V AC	5804.3	5804.3/S	Yellow	79 (3.11)
4 Channel	220V AC	5805.3	5805.3/S	Green	79 (3.11)
4 Channel	240V AC	5806.3	5806.3/S	Red	79 (3.11)

DATA SUBJECT TO CHANGE WITHOUT NOTICE

GENERAL RELAY SPECIFICATIONS*

Mechanical Life (cycles).....> 3 x 10^7
Max operating frequency
- at rated load.....600 cycles/hour
- no load .....72000 cycles/hour

Operating / release time .....7 ms/ 3 ms

COIL SPECIFICATIONS*

Contact material .....AgNi
Rated load (capacity) .....16A at 250V AC / 24 V DC
Max. breaking capacity.....4000 VA
Min. breaking capacity.....0.3 W
Electrical life (resistive AC1).....> 0.7 x 10^5

Coil Voltage AC / DC	Coil operating range V AC / DC		Coil Current in mA	Coil resistance at 20°C in Ω	Acceptable resistance
	Min.	Max.			
5.0	3.5	12.7	96.0	60.0	± 10 %
6.0	4.2	15.3	80.0	90.0	± 10 %
12.0	8.4	30.6	40.0	360.0	± 10 %
24.0	16.8	61.2	20.0	1,440.0	± 10 %
48.0	33.6	122.4	10.0	5,700.0	± 10 %
60.0	42.0	153.0	8.0	7,500.0	± 10 %
110.0	77.0	280.0	4.4	25,200.0	± 10 %

RELAY PINOUT*

SPDT

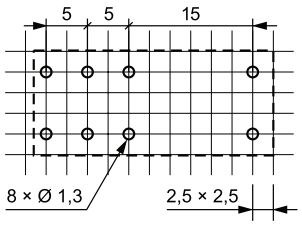

CONTACT CIRCUITS*

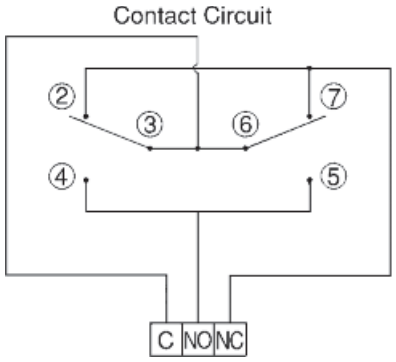

COIL CIRCUITS

AC COIL CIRCUIT

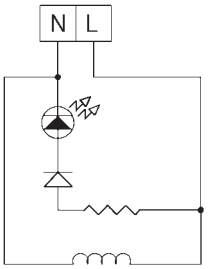

DC COIL CIRCUIT

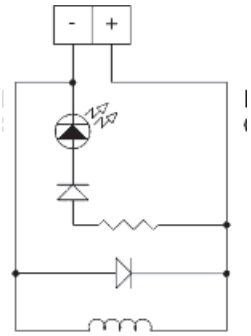

* For more information please see page 76 (Relay RM85)

DATA SUBJECT TO CHANGE WITHOUT NOTICE

Safety Relay Modules

Isolated Channels - 8 Amp Contacts, 35 or 32 DIN Rail

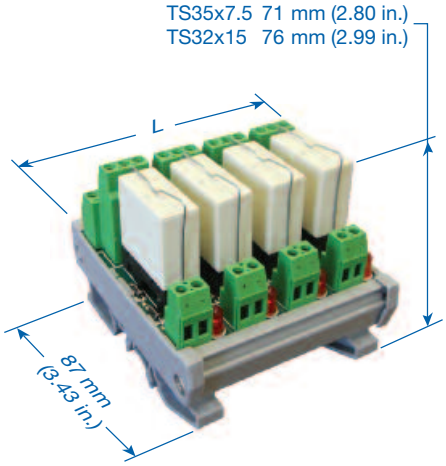

Isolated Channel (Double Pole Double Throw)

Altech Safety Relay Modules utilize Relays with Force-Guided-Contacts that meet or exceed international standards, TÜV and UL. They are designed to protect man and machine as specified in OSHA FR1910 Regulations, a mandatory requirement of the European Machinery Directive EMD 89.392 EEC. The Safety Relays are used in Safety Devices such as Emergency Stop Modules, Safety Gate Monitors, 2-Hand Safety Modules, etc.

This series of Safety Relay Modules are Double Pole, Double Throw configurations, and are available as 1, 2, 4, 8 and 16 isolated channels and 8 and 16 bussed channels with 12 or 24 VDC coils. Isolated channels allow control of each relay by a different logic system, if necessary. There are two inputs for each relay coil per channel. Bussed channels allow high density packaging with a common input for all relays.Safety Relay Modules may be ordered with three different types of relay contact material, depending on the actual load current.

- Screw-Cage Clamp Connection
- LED Coil Voltage Indicator
- Reverse DC Polarity LED Protection
- Surge Suppression With DC Coils
- Industry Standard Relays
- DIN Rail Mount, Panel Mount Available

DPDT

Isolated Channel (no bus)	Coil Voltage	Contact Material:Contact Material: $AgSnO_2$+0.2µmAu Contact Ratings: 8A(2x5A) 250VDC, 400VAC Part Number	Contact Material: AgNi10+0.2µmAu Contact Ratings: 8A(2x5A) 250VDC, 400VAC Part Number	AgNi10+5µmAu Contact Ratings: 8A(2x5A) 250VDC, 400VAC Part Number	Module Length (L) in mm (in)"
1 Channel	12V	8949.2C	8949.2N	8949.2S	21 (0.83)
1 Channel	24V	8951.2C	8951.2N	8951.2S	21 (0.83)
2 Channel	12V	8949.3C	8949.3N	8949.3S	40 (1.57)
2 Channel	24V	8951.3C	8951.3N	8951.3S	40 (1.57)
4 Channel	12V	8955.2C	8955.2N	8955.2S	79 (3.11)
4 Channel	24V	8956.2C	8956.2N	8956.2S	79 (3.11)
8 Channel	12V	8955.3C	8955.3N	8955.3S	157 (6.18)
8 Channel	24V	8956.3C	8956.3N	8956.3S	157 (6.18)
16 Channel	12V	8963.2C	8963.2N	8963.2S	311 (12.24)
16 Channel	24V	8972.2C	8972.2N	8972.2S	311 (12.24)

DATA SUBJECT TO CHANGE WITHOUT NOTICE

Relay Pinout

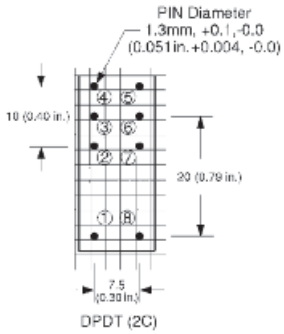

Bottom View. Relay Pinouts, Grid 2.54mm (0.1in.)

Coil Circuits

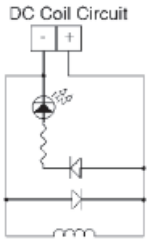

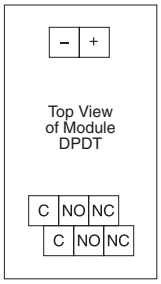

Contact Circuits

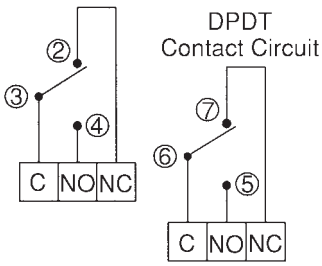

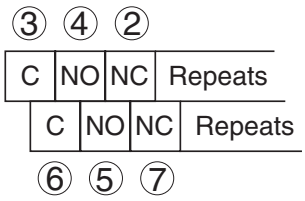

Relay Specifications

-Normal Coil Voltage:	12,24 VDC
-Coil Power Dissipation:	0.7W
-Max. Switching Voltage:	250 VDC, 400 AC
-Max. Switching Current:	8A(2x5A simultaneous)
-Max. Switching Power	
DC	200W (2x160W simultaneous)
AC	2000VA (2x1250VA simultaneous)
-Contact Switching Rate:	10 operations/ sec.
-Relay Operate Time	≤15 ms
-Relay Release Time	≤12 ms
-Contact Arrangements	DPDT, 2 FORM C
-Contact Material:	
Standard	AgNi10+0.2μmAu
Optional	$AgSnO_2$+0.2μmAu
	AgNi10+5μmAu
-Mechanical Life:	≥$50x10^6$ operation cycles
-Ambient Temperature:	-40°+ 70°C
-Cover Material:	Polyamide 6
-Weight:	15g

Coil Specifications

Rated Voltage	Voltage Range	Coil Resistance
12VDC	9.6V-19.2V	210Ω ± 10%
24VDC	19.2V-38.4V	820Ω ± 10%

DATA SUBJECT TO CHANGE WITHOUT NOTICE

Safety Relay Modules

Bussed Channels - 8 Amp Contacts, 35 or 32 DIN Rail

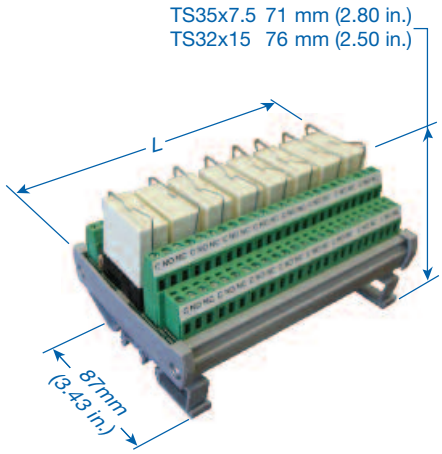

Bussed Channel (Double Pole Double Throw)

Altech Safety Relay Modules utilize Relays with Force-Guided-Contacts that meet or exceed international standards, TÜV and UL. They are designed to protect man and machine as specified in OSHA FR1910 Regulations, a mandatory requirement of the European Machinery Directive EMD 89.392 EEC. The Safety Relays are used in Safety Devices such as Emergency Stop Modules, Safety Gate Monitors, 2-Hand Safety Modules, etc.

This series of Safety Relay Modules are Double Pole, Double Throw configurations, and are available as 1, 2, 4, 8 and 16 isolated channels and 8 and 16 bussed channels with 12 or 24 VDC coils. Isolated channels allow control of each relay by a different logic system, if necessary. There are two inputs for each relay coil per channel. Bussed channels allow high density packaging with a common input for all relays.Safety Relay Modules may be ordered with three different types of relay contact material, depending on the actual load current.

- Screw-Cage Clamp Connection
- LED Coil Voltage Indicator
- Reverse DC Polarity LED Protection
- Surge Suppression With DC Coils
- Industry Standard Relays
- DIN Rail Mount, Panel Mount Available

DPDT

Bussed Channels	Coil Voltage	Contact Material:Contact Material: $AgSnO_2$+0.2µmAu Contact Ratings: 8A(2x5A) 250VDC, 400VAC Part Number	Contact Material: AgNi10+0.2µmAu Contact Ratings: 8A(2x5A) 250VDC, 400VAC Part Number	AgNi10+5µmAu Contact Ratings: 8A(2x5A) 250VDC, 400VAC Part Number	Module Length (L) in mm (in)"
8 Channel, DC+	12V	8923.2C	8923.2N	8923.2S	125 (4.92)
8 Channel, DC+	24V	8924.2C	8924.2N	8924.2S	125 (4.92)
8 Channel, DC-	12V	8923.3C	8923.3N	8923.3S	125 (4.92)
8 Channel, DC-	24V	8924.4C	8924.4N	8924.4S	125 (4.92)
16 Channel, DC+	12V	8926.2C	8926.2N	8926.2S	248 (9.76)
16 Channel, DC+	24V	8926.3C	8926.3N	8926.3S	248 (9.76)
16 Channel, DC-	12V	8927.2C	8927.2N	8927.2S	248 (9.76)
16 Channel, DC-	24V	8927.3C	8927.3N	8927.3S	248 (9.76)

DATA SUBJECT TO CHANGE WITHOUT NOTICE

Relay Pinout

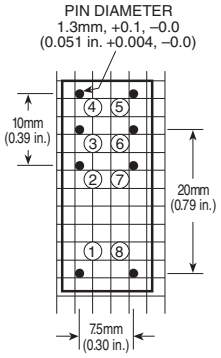

Coil Circuits

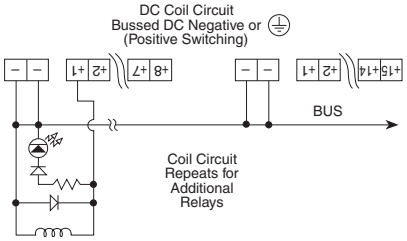

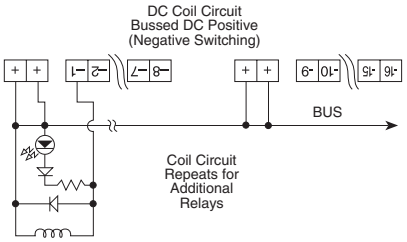

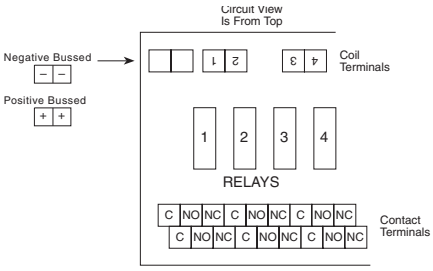

Contact Circuits

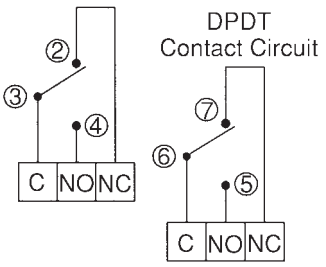

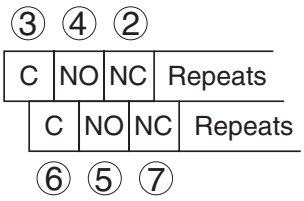

Relay Specifications

-Normal Coil Voltage:	12,24 VDC
-Coil Power Dissipation:	0.7W
-Max. Switching Voltage:	250 VDC, 400 AC
-Max. Switching Current:	8A(2x5A simultaneous)
-Max. Switching Power	
DC	200W (2x160W simultaneous)
AC	2000VA (2x1250VA simultaneous)
-Contact Switching Rate:	10 operations/ sec.
-Relay Operate Time	≤15 ms
-Relay Release Time	≤12 ms
-Contact Arrangements	DPDT, 2 FORM C
-Contact Material:	
Standard	AgNi10+0.2μmAu
Optional	$AgSnO_2$+0.2μmAu
	AgNi10+5μmAu
-Mechanical Life:	≥$50x10^6$ operation cycles
-Ambient Temperature:	-40°+ 70°C
-Cover Material:	Polyamide 6
-Weight:	15g

Coil Specifications

Rated Voltage	Voltage Range	Coil Resistance
12VDC	9.6V-19.2V	210Ω ± 10%
24VDC	19.2V-38.4V	820Ω ± 10%

DATA SUBJECT TO CHANGE WITHOUT NOTICE

Safety Relay Modules

4 Pole Relays - 8 Amp, 35 or 32 DIN Rail

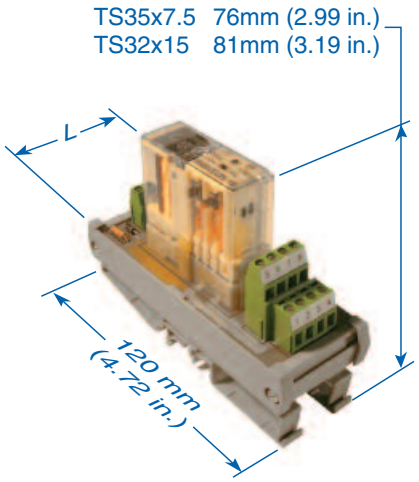

4 Pole, 8 Amp

Altech Safety Relay Modules utilize Relays with Force-Guided-Contacts that meet or exceed international standards, TÜV and UL. They are designed to protect man and machine as specified in OSHA CFR1910 Regulations, which is a mandatory requirement of the European Machinery Directive EMD 89.392 EEC.

- Screw-Cage clamp Connections
- LED Coil Voltage Indicator
- Reverse DC Polarity LED Protection
- Surge Suppression With DC Coil
- Din Rail Mount, Panel Mount Available

Altech Safety Relays are electro-mechanical relays that are mechanically linked together, causing all contacts to move together when the coil is energized. Force-Guided-contacts are also known as positive-guided-contacts, captive contacts or locked contacts. In addition, our Safety Relays have Crown Contacts which provide two locations per contacts to improve switching conditions. The Safety Relays are used in Safety Devices such as Emergency Stop Modules, Safety Gate Monitors, 2-Hand Safety Modules, Safety Light Curtains, etc.

This series of Safety Relay Modules consist of 4 pole relays with two choices of configurations (2NO/2NC or 3NO/1NC), with 8 or 10 Amp contacts, and are available as 1,2, and 4 isolated channels with 12, or 24 VDC coils. Isolated channels allows control of each relay by a different logic system, if necessary. There are two inputs for each relay coil per channel. Safety Relay Modules may be ordered with three different types of relay contact material, depending on the actual load current. The part numbers shown in this data sheet are for our standard contact material, which is $AgSnO_2$ + 0.2µmAu.

		Contact Material*: $AgSnO_2$ + 0.2µmAu **Contact Ratings:** 8A 250VDC, 400VAC **Contact Ratings:**		
		2N.0 + 2N.C	3N.0 + 1N.C	
	Coil Voltage	**Part Number**	**Part Number**	**Module Length (L) in mm (in)"**
1 Channel	12V	156.0A11.1222C	156.0A11.1231C	40.10 (1.58)
1 Channel	24V	156.0A11.2422C	156.0A11.2431C	40.10 (1.58)
2 Channel	12V	256.0A11.1222C	256.0A11.1231C	78.20 (3.08)
2 Channel	24V	256.0A11.2422C	256.0A11.2431C	78.20 (3.08)
4 Channel	12V	456.0A11.1222C	456.0A11.1231C	154.40 (6.08)
4 Channel	24V	456.0A11.2422C	456.0A11.2431C	154.40 (6.08)

* Note: Additional relay contact materials are available upon request. Please contact Altech for additional information.

DATA SUBJECT TO CHANGE WITHOUT NOTICE

4 Pole, 8 Amp

DC Coil Circuits

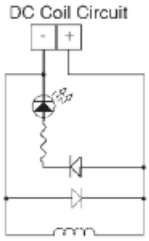

Contact Circuits

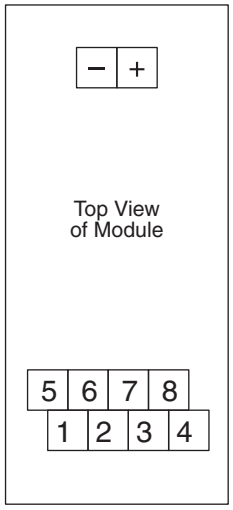

Relay Configurations

2 N.O + 2 N.C
NO Pin (1,2), (5,6)
NC Pin (3,4), (7,8)

3 N.O + 1 N.C
NO Pin (1,2), (5,6), (7,8)
NC Pin (3,4)

Relay Specifications - 8 Amps

-Normal Coil Voltage:	12,24 VDC
-Coil Power Dissipation:	0.6W
-Max. Switching Voltage:	250VDC, 400VAC
-Max. Switching Current:	8A
-Max. Switching Power	
DC	200W
AC	2000VA
-Contact Switching Rate:	10 operations/ sec.
-Relay Operate Time	20 ms
-Relay Release Time	6 ms
-Contact Arrangements	2NO/2NC, 3NO/1NC
-Contact Material:	
Standard	$AgSnO_2$+0.2µmAu
Optional	AgNi10+0.2µmAu
	AgNi10+5µmAu
-Mechanical Life:	≥50x10^6 operation cycles
-Ambient Temperature:	-40°+ 85°C
-Cover Material:	Thermoplast
-Weight:	35g

Coil Specifications

Rated Voltage	Voltage Range	Coil Resistance
12VDC	8.4V-16.8V	240Ω ± 10%
24VDC	16.8V-33.6V	960Ω ± 10%

DATA SUBJECT TO CHANGE WITHOUT NOTICE

Safety Relay Modules

4 Pole Relays - 10 Amp, 35 or 32 DIN Rail

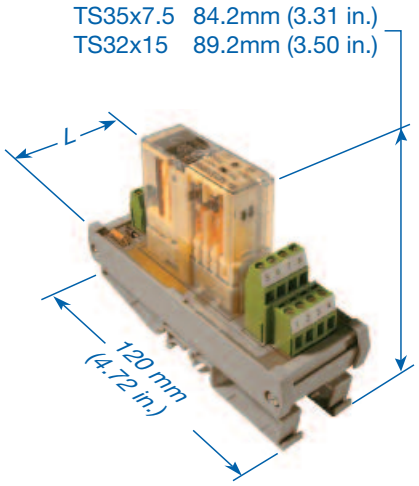

4 Pole, 10 Amp

Altech Safety Relay Modules utilize Relays with Force-Guided-Contacts that meet or exceed international standards, TÜV and UL. They are designed to protect man and machine as specified in OSHA CFR1910 Regulations, which is a mandatory requirement of the European Machinery Directive EMD 89.392 EEC.

- Screw-Cage clamp Connections
- LED Coil Voltage Indicator
- Reverse DC Polarity LED Protection
- Surge Suppression With DC Coil
- Din Rail Mount, Panel Mount Available

Altech Safety Relays are electro-mechanical relays that are mechanically linked together, causing all contacts to move together when the coil is energized. Force-Guided-contacts are also known as positive-guided-contacts, captive contacts or locked contacts. In addition, our Safety Relays have Crown Contacts which provide two locations per contacts to improve switching conditions. The Safety Relays are used in Safety Devices such as Emergency Stop Modules, Safety Gate Monitors, 2-Hand Safety Modules, Safety Light Curtains, etc.

This series of Safety Relay Modules consist of 4 pole relays with two choices of configurations (2NO/2NC or 3NO/1NC), with 8 or 10 Amp contacts, and are available as 1,2, and 4 isolated channels with 12, or 24 VDC coils. Isolated channels allows control of each relay by a different logic system, if necessary. There are two inputs for each relay coil per channel. Safety Relay Modules may be ordered with three different types of relay contact material, depending on the actual load current. The part numbers shown in this data sheet are for our standard contact material, which is $AgSnO_2$ + 0.2µmAu.

		Contact Material*: $AgSnO_2$ + 0.2µmAu **Contact Ratings:** 10A 250VDC, 400VAC **Contact Ratings:**		
		2N.0 + 2N.C	3N.0 +1N.C	
	Coil Voltage	**Part Number**	**Part Number**	**Module Length (L) in mm (in)"**
1 Channel	12V	156.0A01.1222C	156.0A01.1231C	40.10 (1.58)
1 Channel	24V	156.0A01.2422C	156.0A01.2431C	40.10 (1.58)
2 Channel	12V	256.0A01.1222C	256.0A01.1231C	78.20 (3.08)
2 Channel	24V	256.0A01.2422C	256.0A01.2431C	78.20 (3.08)
4 Channel	12V	456.0A01.1222C	456.0A01.1231C	154.40 (6.08)
4 Channel	24V	456.0A01.2422C	456.0A01.2431C	154.40 (6.08)

* Note: Additional relay contact materials are available upon request. Please contact Altech for additional information.

DATA SUBJECT TO CHANGE WITHOUT NOTICE

4 Pole, 10 Amp

DC Coil Circuits

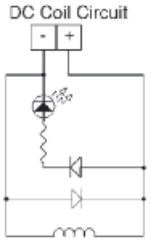

Contact Circuits

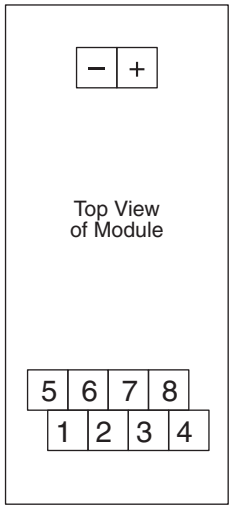

Relay Configurations

2 N.O + 2 N.C
NO Pin (3,4), (7,8)
NC Pin (1,2), (5,6)

3 N.O + 1 N.C
NO Pin (3,4), (5,6), (7,8)
NC Pin (1,2)

Relay Specifications - 10 Amps

-Normal Coil Voltage:	12,24 VDC
-Coil Power Dissipation:	0.75W
-Max. Switching Voltage:	250VDC, 400VAC
-Max. Switching Current:	10A
-Max. Switching Power	
DC	240W
AC	2500VA
-Contact Switching Rate:	10 operations/ sec.
-Relay Operate Time	27 ms
-Relay Release Time	5 ms
-Contact Arrangements	2NO/2NC, 3NO/1NC
-Contact Material:	
Standard	$AgSnO_2$+0.2µmAu
Optional	AgNi10+0.2µmAu
	AgNi10+5µmAu
-Mechanical Life:	>30x10^6 operation cycles
-Ambient Temperature:	-40°+ 80°C
-Cover Material:	Thermoplast
-Weight:	75g

Coil Specifications

Rated Voltage	Voltage Range	Coil Resistance
12VDC	8.4V-19.2V	192Ω ± 10%
24VDC	16.8V-38.4V	770Ω ± 10%

DATA SUBJECT TO CHANGE WITHOUT NOTICE

Safety Relay Modules

6 Pole Relays - 8 Amp, 35 or 32 DIN Rail

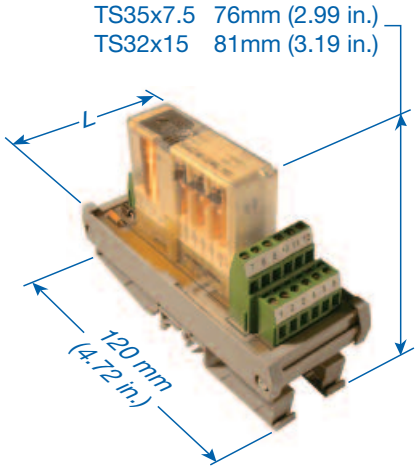

6 Pole, 8 Amp

Altech Safety Relay Modules utilize Relays with Force-Guided-Contacts that meet or exceed international standards, TÜV, SA, SUVA, and UL. They are designed to protect man and machine as specified in OSHA CFR1910 Regulations, which is a mandatory requirement of the European Machinery Directive EMD 89.392 EEC.

- Screw-Cage clamp Connections
- LED Coil Voltage Indicator
- Reverse DC Polarity LED Protection
- Surge Suppression With DC Coil
- Din Rail Mount, Panel Mount Available

Altech Safety Relays are electro-mechanical relays that are mechanically linked together, causing all contacts to move together when the coil is energized. Force-Guided-contacts are also known as positive-guided-contacts, captive contacts or locked contacts. In addition, our Safety Relays have Crown Contacts which provides two locations per contacts to improve switching conditions. The Safety Relays are used in Safety Devices such as Emergency Stop Modules, Safety Gate Monitors, 2-Hand Safety Modules, Safety Light Curtains, etc.

This series of Safety Relay Modules consist of 6 pole relays with three configuration choices (2NO+4NC, 3NO+3NC, 4NO+2NC), 8 or 10 Amp contacts and either 1, 2 and 4 isolated channels with 12 or 24 VDC coils. Isolated channels allow control of each relay by a different logic system, if necessary. There are two inputs for each relay coil channel. Modules can ordered with three contact materials, dependent upon the actual current load. The standard contact material is AgCd0+0.2∝mAu.

		Contact Material*: AgCd0+0.2μmAu **Contact Ratings:** 8A 250VDC,400VAC **Contact Ratings:**			
		2N.0 + 4N.C	3N.0 + 3N.C	4N.0 + 2N.C	
	Coil Voltage	**Part Number**		**Part Number**	**Module Length (L) in mm (in)"**
1 Channel	12V	156.0A12.1224C	156.0A12.1233C	156.0A12.1242C	46.45 (1.83)
1 Channel	24V	156.0A12.2424C	156.0A12.2433C	156.0A12.2442C	46.45 (1.83)
2 Channel	12V	256.0A12.1224C	256.0A12.1233C	256.0A12.1242C	90.90 (3.58)
2 Channel	24V	256.0A12.2424C	256.0A12.2433C	256.0A12.2442C	90.90 (3.58)
4 Channel	12V	456.0A12.1224C	456.0A12.1233C	456.0A12.1242C	179.80 (7.08)
4 Channel	24V	456.0A12.2424C	456.0A12.2433C	456.0A12.2442C	179.80 (7.08)

* Note: Additional relay contact materials are available upon request. Please contact Altech for additional information.

DATA SUBJECT TO CHANGE WITHOUT NOTICE

6 Pole, 8 Amp

DC Coil Circuits

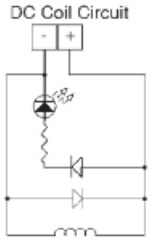

Contact Circuits

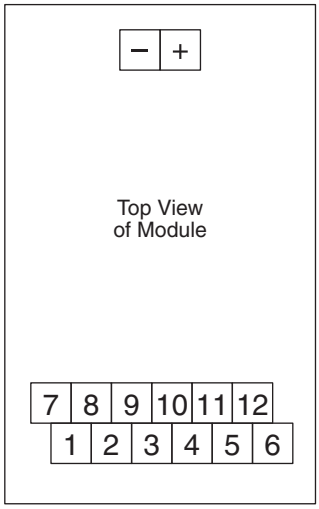

Relay Configurations

2N.0 + 4N.C
- NO Pin (1,2), (7,8)
- NC Pin (3,4), (5,6), (9,10), (11,12)

3N.0 + 3N.C
- NO Pin (1,2), (7,8), (9,10)
- NC Pin (3,4), (5,6), (11,12)

4N.0 + 2N.C
- NO Pin (1,2), (3,4), (7,8), (9,10)
- NC Pin (5,6), (11,12)

Relay Specifications - 8 Amps

-Normal Coil Voltage:	12,24 VDC
-Coil Power Dissipation:	0.8-1.0 W
-Max. Switching Voltage:	250VDC, 400VAC
-Max. Switching Current:	8A
-Max. Switching Power	
DC	200W
AC	2000VA
-Contact Switching Rate:	10 operations/ sec.
-Relay Operate Time	20 ms
-Relay Release Time	6 ms
-Contact Arrangements	2NO/4NC, 3NO/3NC, 4NO/2NC
-Contact Material:	
Standard	$AgSnO_2$+0.2µmAu
Optional	AgNi10+.0.2µmAu AgNi10+5µmAu
-Mechanical Life:	≥50x10^6 operation cycles
-Ambient Temperature:	-40° + 85°C
-Cover Material:	Thermoplast
-Weight:	38g

Coil Specifications

Rated Voltage	Voltage Range	Coil Resistance
12VDC	8.4V-16.8V	145Ω ± 10%
24VDC	16.8V-33.6V	600Ω ± 10%

DATA SUBJECT TO CHANGE WITHOUT NOTICE

Safety Relay Modules

6 Pole Relays - 10 Amp, 35 or 32 DIN Rail

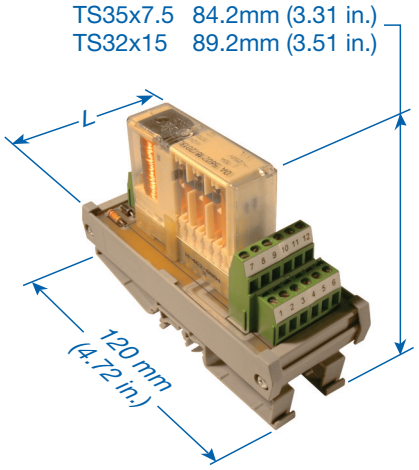

6 Pole, 10 Amp

Altech Safety Relay Modules utilize Relays with Force-Guided-Contacts that meet or exceed international standards, TÜV, SA, SUVA, and UL. They are designed to protect man and machine as specified in OSHA CFR1910 Regulations, which is a mandatory requirement of the European Machinery Directive EMD 89.392 EEC.

- Screw-Cage clamp Connections
- LED Coil Voltage Indicator
- Reverse DC Polarity LED Protection
- Surge Suppression With DC Coil
- Din Rail Mount, Panel Mount Available

Altech Safety Relays are electro-mechanical relays that are mechanically linked together, causing all contacts to move together when the coil is energized. Force-Guided-contacts are also known as positive-guided-contacts, captive contacts or locked contacts. In addition, our Safety Relays have Crown Contacts which provides two locations per contacts to improve switching conditions. The Safety Relays are used in Safety Devices such as Emergency Stop Modules, Safety Gate Monitors, 2-Hand Safety Modules, Safety Light Curtains, etc.

This series of Safety Relay Modules consist of 6 pole relays with three configuration choices (2NO+4NC, 3NO+3NC, 4NO+2NC), 8 or 10 Amp contacts and either 1, 2 and 4 isolated channels with 12 or 24 VDC coils. Isolated channels allow control of each relay by a different logic system, if necessary. There are two inputs for each relay coil channel. Modules can ordered with three contact materials, dependent upon the actual current load. The standard contact material is AgCd0+0.2∝mAu.

Contact Material*: AgCdO+0.2µmAu

Contact Ratings: 10A 250VDC,400VAC

		Contacts: 2N.0 + 4N.C	3N.0 + 3N.C	4N.0 + 2N.C	
	Coil Voltage	**Part Number**		**Part Number**	**Module Length (L) in mm (in)"**
1 Channel	12V	156.0A02.1224C	156.0A02.1233C	156.0A02.1242C	46.45 (1.83)
1 Channel	24V	156.0A02.2424C	156.0A02.2433C	156.0A02.2442C	46.45 (1.83)
2 Channel	12V	256.0A02.1224C	256.0A02.1233C	256.0A02.1242C	90.90 (3.58)
2 Channel	24V	256.0A02.2424C	256.0A02.2433C	256.0A02.2442C	90.90 (3.58)
4 Channel	12V	456.0A02.1224C	456.0A02.1233C	456.0A02.1242C	179.80 (7.08)
4 Channel	24V	456.0A02.2424C	456.0A02.2433C	456.0A02.2442C	179.80 (7.08)

* Note: Additional relay contact materials are available upon request. Please contact Altech for additional information.

DATA SUBJECT TO CHANGE WITHOUT NOTICE

6 Pole, 10 Amp

DC Coil Circuits

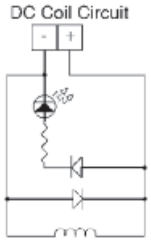

Contact Circuits

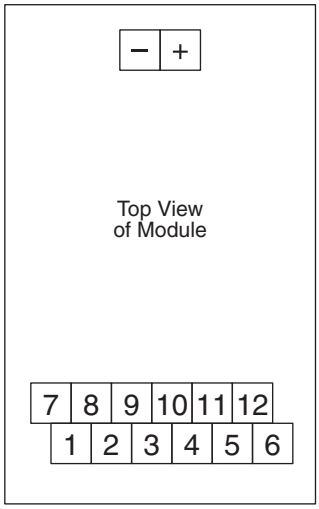

Relay Configurations

2N.0 + 4N.C
- NO Pin (5,6), (11,12)
- NC Pin (1,2), (3,4), (7,8), (9,10)

3N.0 + 3N.C
- NO Pin (3,4), (5,6), (11,12)
- NC Pin (1,2), (7,8), (9,10)

4N.0 + 2N.C
- NO Pin (3,4), (5,6), (9,10), (11,12)
- NC Pin (1,2), (7,8)

Relay Specifications - 10 Amps

-Normal Coil Voltage:	12,24 VDC
-Coil Power Dissipation:	1.0 W
-Max. Switching Voltage:	250VDC, 400VAC
-Max. Switching Current:	10A
-Max. Switching Power	
DC	240W
AC	2500VA
-Contact Switching Rate:	10 operations/ sec.
-Relay Operate Time	27 ms
-Relay Release Time	5 ms
-Contact Arrangements	2NO/4NC, 3NO/3NC, 4NO/2NC
-Contact Material:	
Standard	$AgSnO_2$+0.2µmAu
Optional	AgNi10+0.2µmAu
	AgNi10+5µmAu
-Mechanical Life:	≥30x10^6 operation cycles
-Ambient Temperature:	-40°+ 80°C
-Cover Material:	Thermoplast
-Weight:	85g

Coil Specifications

Rated Voltage	Voltage Range	Coil Resistance
12VDC	8.4V-19.2V	140Ω ± 10%
24VDC	16.8V-38.4V	570Ω ± 10%

DATA SUBJECT TO CHANGE WITHOUT NOTICE

Safety Relay Modules
8 Pole - 10 Amp, 35 or 32 DIN Rail

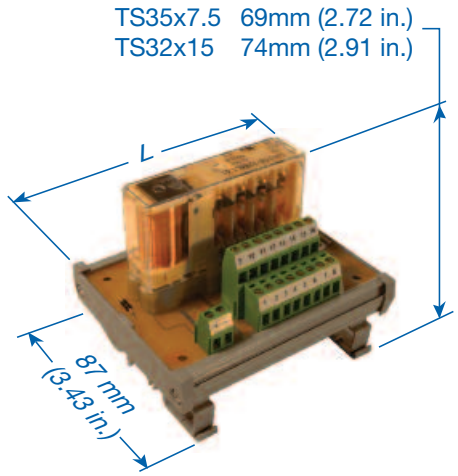

8 Pole, 10 Amp

These Safety Relay Modules utilize Relays with Force-Guided-Contacts that meet or exceed international standards, TÜV, SA, SUVA, and UL. They meet the standard EN50205 for safety relays, UL/94/VO fire protection, VDE 0106 Protection Class 11, and VDE 0110/group C 250VAC insulation class.

- Screw-Cage clamp Connections
- LED Coil Voltage Indicator
- Reverse DC Polarity LED Protection
- Surge Suppression With DC Coil
- Din Rail Mount, Panel Mount Available

Altech Safety Relays are electro-mechanical relays that are mechanically linked together, causing all contacts to move together when the coil is energized. Force-Guided-contacts are also known as positive-guided-contacts, captive contacts or locked contacts. In addition, our Safety Relays have Crown Contacts which provides two locations per contacts to improve switching conditions. The Safety Relays are used in Safety Devices such as Emergency Stop Modules, Safety Gate Monitors, 2-Hand Safety Modules, Safety Light Curtains, etc.

This series of Safety Relay Modules consists of 8 pole relays with 10 Amps in six configurations choices. Standard contact material for this series is $AgSnO_2$ + 0.2µmAu.

		Contact Material*: AgCdO+0.2µmAu **Contact Ratings:** 10A 250VDC,400VAC			
		7 NO/1 NC	**Contacts:** 6 NO/2 NC	5 NO/3 NC	
	Coil Voltage	**Part Number**		**Part Number**	**Module Length (L) in mm (in)"**
1 Channel	12	156.0A03.1271C	156.0A03.1262C	156.0A03.1253C	103.6 (4.08)
1 Channel	24	156.0A03.2471C	156.0A03.2462C	156.0A03.2453C	103.6 (4.08)

		4 NO/4 NC	**Contacts:** 3 NO/5 NC	2 NO/6 NC	
	Coil Voltage	**Part Number**		**Part Number**	**Module Length (L) in mm (in)"**
1 Channel	12	156.0A03.1244C	156.0A03.1235C	156.0A03.1226C	103.6 (4.08)
1 Channel	24	156.0A03.2444C	156.0A03.2435C	156.0A03.2426C	103.6 (4.08)

DATA SUBJECT TO CHANGE WITHOUT NOTICE

8 Pole, 10 Amp

DC Coil Circuits

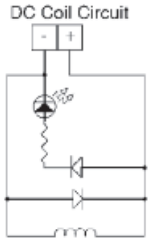

Contact Circuits

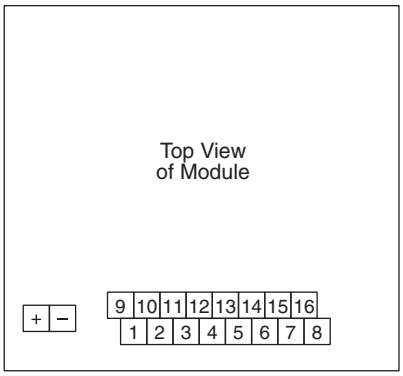

Relay Configurations

2NO/6NC
NO Pin (7,8), (15,16)
NC Pin (1,2), (3,4), (5,6), (9,10), (11,12), (13,14)

3NO/5NC
NO Pin (5,6), (7,8), (15,16)
NC Pin (1,2), (3,4), (9,10), (11,12), (13,14)

4NO /4NC
NO Pin (5,6), (7,8), (13,14), (15,16)
NC Pin (1,2), (3,4), (9,10), (11,12), (13,14)

5NO /3NC
NO Pin (3,4), (5,6), (7,8), (13,14), (15,16)
NC Pin (1,2), (9,10), (11,12)

6NO /2NC
NO Pin (3,4), (5,6), (7,8), (11,12), (13,14), (15,16)
NC Pin (1,2), (9,10)

7NO /1NC
NO Pi (1,2), (3,4), (5,6), (7,8), (9,10), (11,12), (13,14), (15,16)
NC Pin (9,10)

Relay Specifications - 8 Pole

-Normal Coil Voltage:	12, 24 VDC
-Coil Power Dissipation:	1.25-1.65W
-Max. Switching Voltage:	250VDC
-Max. Switching Current:	10A
-Max. Switching Power:	2500VAC
-Contact Switching Rate:	10 operations per second
-Relay Operate Time	27 ms
-Relay Release Time	5 ms
-Contact Arrangements:	
	2NO/16NC
	3NO/5NC
	4NO/4NC
	5NO/3NC
	6NO/2NC
	7NO/1NC
-Contact Material:	$AgSnO_2$+0.2µmAu
-Mechanical Life:	$30x10^6$ operation cycles
-Ambient Temperature:	-25° + 75°C
-Weight:	95g

Coil Specifications

Rated Voltage	Min. Pick-up	Coil Resistance
12VDC	8.4V-15.2V	88Ω/112Ω ± 15%*
24VDC	16.8V-38.4V	370Ω/460Ω ± 15%*

* 88Ω/370Ω for contact arrangements 2NO/6NC, 3NO/5NC

* 112Ω/460Ω for contact arrangements 4NO/4NC, 5NO/3NC/6NO/2NC/7NO/7NC

DATA SUBJECT TO CHANGE WITHOUT NOTICE

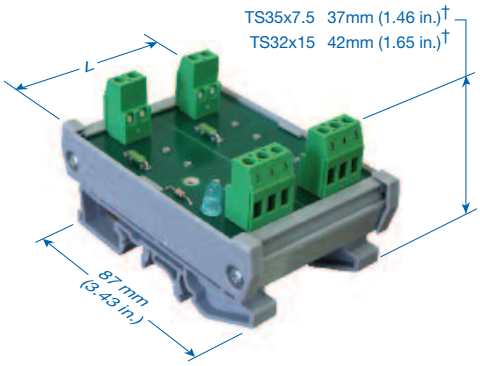

I/O Isolated

Mount standard opto coupler input/output (I/O) modules in a high density arrangement for logic output to field devices, or for input of field data to the controller. I/O modules optically isolate ICs and PLCs from damaging field voltage spikes and line noise, while controlling up to 3 Amp field current with less than 20mA logic current. Altech I/O Module Carriers can accept up to 16 industry standard 0.6 in. (15.24mm) I/O modules in any combination: Input, Output, AC or DC from most manufacturers.

- Screw-Cage Clamp Connection
- Integral Sockets, Retaining Nut
- Field Voltage Rating: 280V AC/DC[a]
- LED Indication, Fuse Protection
- DIN Rail Mount, Panel Mount Available

Custom designs can be accommodated!

Low current LED with dropping resistor for high resistance pull-up and low logic sink/source current requirements.

Technical Information

Fuse Rating.....5A/125C AC[b]
Wire Range .....0.5-4 mm^2 / 22-12 AWG
Torque .....0.5-4 Nm / 4 lbs-in.
Stripping Length ...8 mm

Part Number	Type	Position	Logic Voltage	LED	Module Length (L) in mm (in)
8954.0/B	I/O I-1B	1 Position	5V DC	Green	34.5 (1.36)
8954.0/E	I/O I-1E	1 Position	15V DC	Yellow	34.5 (1.36)
8954.0/G	I/O I-1G	1 Position	24V DC	Red	34.5 (1.36)
8955.0/B	I/O I-2B	2 Position	5V DC	Green	57.8 (2.28)
8955.0/E	I/O I-2E	2 Position	15V DC	Yellow	57.8 (2.28)
8955.0/G	I/O I-2G	2 Position	24V DC	Red	57.8 (2.28)
8956.0/B	I/O I-4B	4 Position	5V DC	Green	114 (4.49)
8956.0/E	I/O I-4E	4 Position	15V DC	Yellow	114 (4.49)
8956.0/G	I/O I-4G	4 Position	24V DC	Red	114 (4.49)
8957.0/B	I/O I-8B	8 Position	5V DC	Green	226 (8.90)
8957.0/E	I/O I-8E	8 Position	15V DC	Yellow	226 (8.90)
8957.0/G	I/O I-8G	8 Position	24V DC	Red	226 (8.90)

[a] Fuse rating limits field side rating.
- PCB Traces, Field Side: 10A/300V
- PCB Traces, Logic Side: 1A with 6A Bus
- Terminal Blocks: 15A/300V

† Dimension is to top board, add height of relay to determine clearance.

[b] 3A/250V fuse available, please consult Altech.

DATA SUBJECT TO CHANGE WITHOUT NOTICE

Standard Pinout

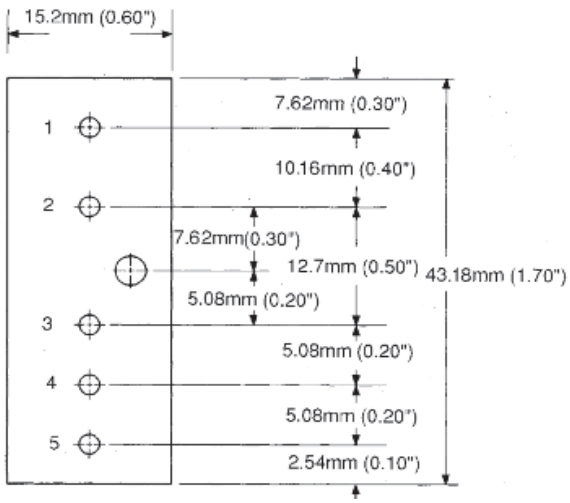

I/O Isolated Positions

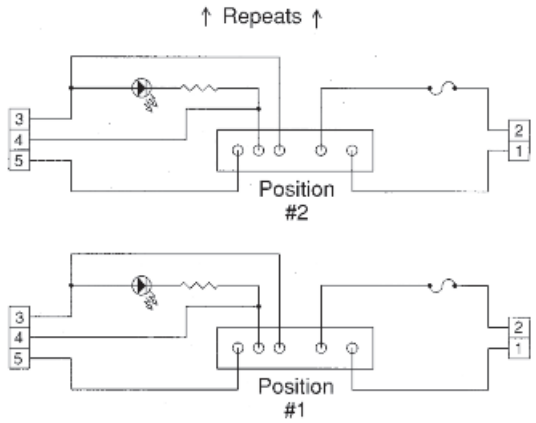

I/O-1 Isolated Positions

Standard Pinout

The I/O Module pin utilization information listed below is intended for use only as a guide. For specific applications, please use only the module manufacturer's published specifications.

Pins 1 & 2: Field Connections

- AC Output to field load, inductive up to 3.5A at nominal 24V AC, 120V AC or 240V AC. AC hot to either pin, field load on other pin.
- DC Output to field load (inductive OK with commutating diode). Some modules polarized with pin #1 positive (+). Standard output voltages 60V DC (5-60), 200V DC (10-200).
- AC Input of field data to the logic, 10mA max at nominal 24V AC (18-36), 120V AC (90-140) and 240V AC (90-280). Field signal to either pin.
- DC Input of field data to the logic, some modules dual rated AC/DC, other nominal 5-28V DC (min. 4, max. 32), and nominal 12-48V DC (min. 10, max. 60). Some modules polarized with pin #1 (+).

Pin 3: VCC Logic Power

- Standard modules are available in three nominal logic voltages: 5V DC (normally min. 3 to max. 6), 15V DC (12 to 18) and 24V DC (20 to 30).

Pin 4: Logic Signal

- Output - Logic ground (sink) on pin #4 closes output circuit (pin #1 to pin #2 normally open, shorts with sink on input pin #4). A few positive-logic modules are available.
- Input - Field signal to pins #1 and #2 gives 20-25mA sink at pin #4 (to pin #5).

Pin 5: Logic Ground

- On input modules only (no pin #5 on output modules).

DATA SUBJECT TO CHANGE WITHOUT NOTICE

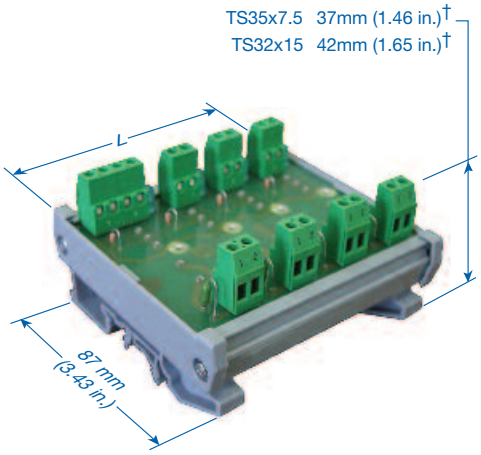

I/O Bussed

Mount standard opto coupler input/output (I/O) modules in a high density arrangement for logic output to field devices, or for input of field data to the controller. I/O modules optically isolate ICs and PLCs from damaging field voltage spikes and line noise, while controlling up to 3 Amp field current with less than 20mA logic current. Altech I/O Module Carriers can accept up to 16 industry standard 0.6 in. (15.24mm) I/O modules in any combination: Input, Output, AC or DC from most manufacturers.

- Screw-Cage Clamp Connection
- Integral Sockets, Retaining Nut
- Field Voltage Rating: 280V AC/DC[a]
- LED Indication, Fuse Protection
- DIN Rail Mount, Panel Mount Available

Custom designs can be accommodated!

Logic status LED which uses the I/O module impedance as its dropping resistor.

Technical Information

Fuse Rating.....5A/125C AC[b]
Wire Range .....0.5-4 mm^2 / 22-12 AWG
Torque .....0.5-4 Nm / 4 lbs-in.
Stripping Length ...8 mm

Part Number	Type	Position	Logic Voltage	LED	Module Length (L) in mm (in)
8956.0	I/O B-4	4 Position	5 to 24V DC	Green	114 (4.49)
8959.0	I/O B-8	8 Position	5 to 24V DC	Green	183 (7.20)
8861.0	I/O B-16	16 Position	5 to 24V DC	Green	363 (14.30)

[a] Fuse rating limits field side rating.
- PCB Traces, Field Side: 10A/300V
- PCB Traces, Logic Side: 1A with 6A Bus
- Terminal Blocks: 15A/300V

† Dimension is to top board, add height of relay to determine clearance.

[b] 3A/250V fuse available, please consult Altech.

DATA SUBJECT TO CHANGE WITHOUT NOTICE

Standard Pinout

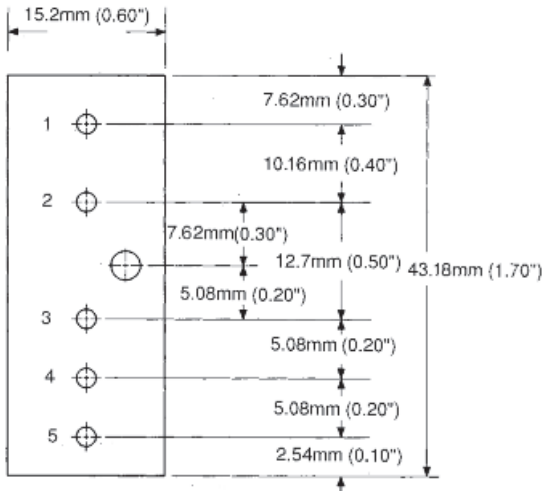

I/O Bussed Positions

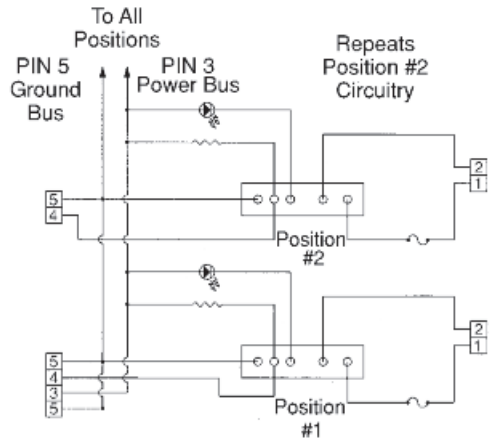

I/O Bussed Positions

Standard Pinout

The I/O Module pin utilization information listed below is intended for use only as a guide. For specific applications, please use only the module manufacturer's published specifications.

Pins 1 & 2: Field Connections

- AC Output to field load, inductive up to 3.5A at nominal 24V AC, 120V AC or 240V AC. AC hot to either pin, field load on other pin.
- DC Output to field load (inductive OK with commutating diode). Some modules polarized with pin #1 positive (+). Standard output voltages 60V DC (5-60), 200V DC (10-200).
- AC Input of field data to the logic, 10mA max at nominal 24V AC (18-36), 120V AC (90-140) and 240V AC (90-280). Field signal to either pin.
- DC Input of field data to the logic, some modules dual rated AC/DC, other nominal 5-28V DC (min. 4, max. 32), and nominal 12-48V DC (min. 10, max. 60). Some modules polarized with pin #1 (+).

Pin 3: VCC Logic Power

- Standard modules are available in three nominal logic voltages: 5V DC (normally min. 3 to max. 6), 15V DC (12 to 18) and 24V DC (20 to 30).

Pin 4: Logic Signal

- Output - Logic ground (sink) on pin #4 closes output circuit (pin #1 to pin #2 normally open, shorts with sink on input pin #4). A few positive-logic modules are available.
- Input - Field signal to pins #1 and #2 gives 20-25mA sink at pin #4 (to pin #5).

Pin 5: Logic Ground

- On input modules only (no pin #5 on output modules).

DATA SUBJECT TO CHANGE WITHOUT NOTICE

PCB Mounting Tracks

Narrow & Wide Mounting Track Extrusion and Components

Mount standard or custom printed circuit boards in Mounting Tracks which can be conveniently DIN rail or panel mounted in your control panel or cabinet. These are the same tracks used for Altech interface modules. We now make them available to you to house and protect your custom boards, etc. Tracks are easily cut to size or can be ordered precut to specific lengths. They are easily assembled from standard components and snap onto 35mm DIN rail or can be panel mounted.

Each track has two sets of printed circuit board guides to accept two alternate board widths.

End Sections hold printed circuit boards securely in place and keep out foreign objects.

MOUNTING

When mounting extrusions on DIN rail, order two or more DIN Rail mounting feet. These feet slide into grooves on the extrusion. Then attach two DIN Rail Mount End Sections with help of EPS screws.

To panel mount, order two Panel Mount End Sections (and EPS screws), each with an integral mounting flange with a 6 x 8mm (.24 x .32 in.) hole slot.

If desired, tracks can be direct mounted using double sided tape. Order two DIN rail mount end sections (and EPS screws).

- Standard Lengths: 1m (3'-3") or 2m (6'-6")
- Track Material: PVC
- Temperature Limit:
  Short Term - 80°C (176°F)
  Continuous - 70°C (158°F)
- End Section, Foot Material: Polyamide
- Preassembled, Precut Lengths Available
- Tracks Accept Standard MT2 Marking Tags

Sizing Information

Printed Circuit Board Width	
Track Type	High Guide (HG)
MTGTK1	73 ± 1mm (2.9 ± 0.05 in.)

Mounting Track Extrusion "Cut-to-Size" Formula
Extrusion Length = Printed Circuit Board Length – 4.5mm (.175 in.)

* Green color available on request.
Contact Altech for more information.

For PC Board Widths 73mm (2.9 in.)

DIN Rail Mount

Panel Mount

	Part Number	Std. Pk.
Mounting Track		
1 meter, grey	MTGTK1/1M	5
2 meter, grey	MTGTK1	5
1 meter, green*	MTGTK1/1M/G	5
2 meter, green*	MTGTK1/G	5
Accessories		
DIN Rail Mount End Section, grey	EPDR1	100
DIN Rail Mount End Section, green*	EPDR1/G	100
DIN Rail Mounting Foot, grey	MTGF1	100
DIN Rail Mounting Foot, green*	MTGF1/G	100
Panel Mount End Section, grey	EPDP1	100
Panel Mount End Section, green*	EPDP1/G	100
DIN Rail / Panel Mount End Section Screws #4x1/2", Phillips Pan head (2 required per end section)	EPS	200
Marking Tags	MT2	100

Narrow Mounting Track

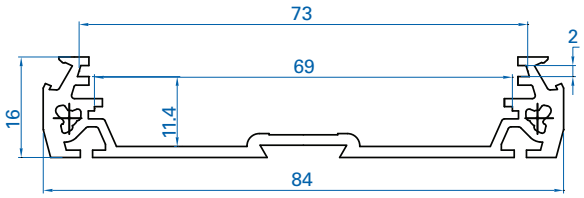

PCB MOUNTING TRACK (73 mm)

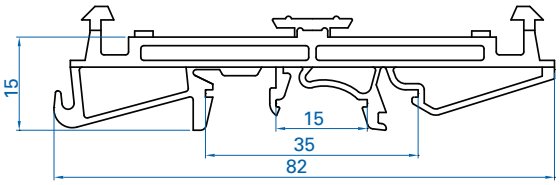

DIN RAIL MOUNTING FOOT (73mm)

DATA SUBJECT TO CHANGE WITHOUT NOTICE

PCB Mounting Tracks

Narrow & Wide Mounting Track Extrusion and Components

For PC Board Widths 110mm (4.9 in.)

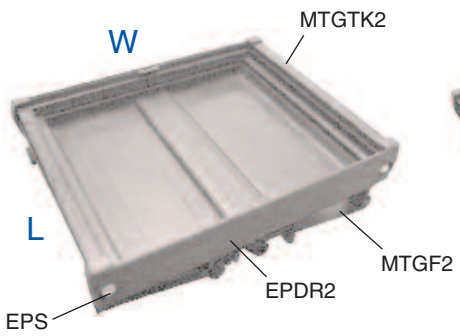

DIN Rail Mount

Panel Mount

	Part Number	Std. Pk.
Mounting Track		
1 meter, grey	MTGTK2/1M	5
2 meter, grey	MTGTK2	5
1 meter, green*	MTGTK2/1M/G	5
2 meter, green*	MTGTK2/G	5
Accessories		
DIN Rail Mount End Section, grey	EPDR2	100
DIN Rail Mount End Section, green*	EPDR2/G	100
DIN Rail Mounting Foot, grey	MTGF2	100
DIN Rail Mounting Foot, green*	MTGF2/G	100
Panel Mount End Section, grey	EPDP2	100
Panel Mount End Section, green*	EPDP2/G	100
DIN Rail / Panel Mount End Section Screws #4x1/2", Phillips Pan head (2 required per end section)	EPS	200
Marking Tags	MT2	100

Wide Mounting Track

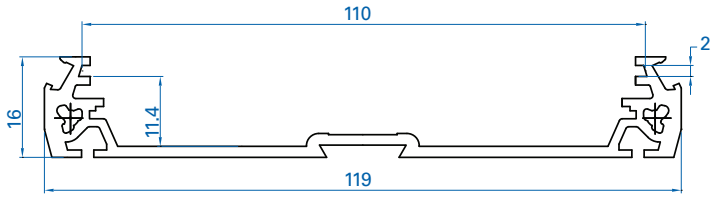

PCB MOUNTING TRACK (110 mm)

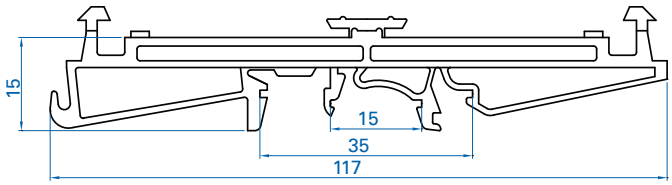

DIN RAIL MOUNTING FOOT (110mm)

Panel Mount Details

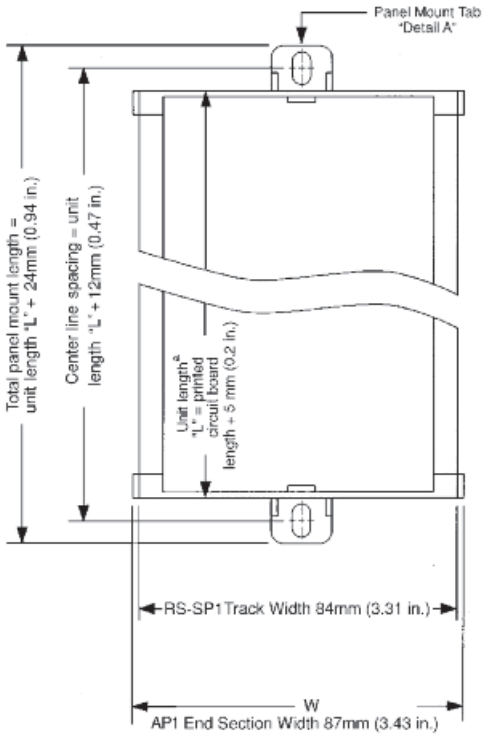

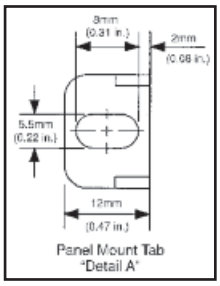

Sizing Information

Printed Circuit Board Width	
Track Type	High Guide (HG)
MTGTK2	110 ± 1mm (4.3 ± 0.05 in.)

Mounting Track Extrusion "Cut-to-Size" Formula
Extrusion Length = Printed Circuit Board Length – 4.5mm (.175 in.)

[a]Also applies for DIN Rail Mount Unit

DATA SUBJECT TO CHANGE WITHOUT NOTICE

CUSTOM INTERFACE MODULES

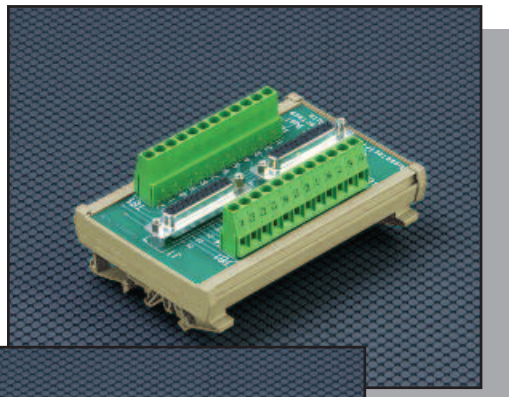

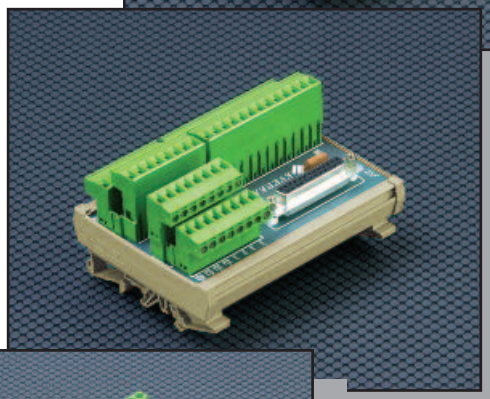

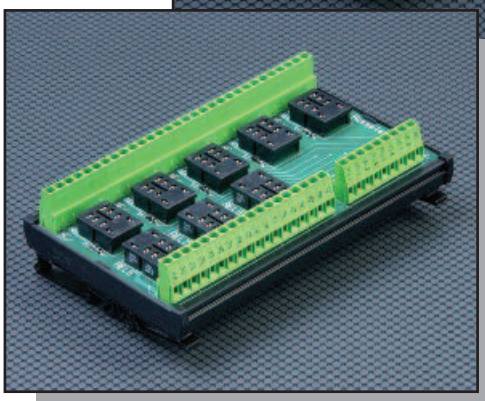

If your design or application requires more functionality or features than our standard product, Altech offers complete engineering, prototype and production services for custom modules.

Our staff has the ability to take your design or requirements and manufacture your custom module. Custom module production generally includes engineering, PCB layout and prototypes, packaged in Altech extrusions for mounting on panels or DIN Rail. In many industrial control systems, customized designs are the solution for many problems.

Altech provides a quick turnaround and competitive solution to your problem. Altech provides the following benefits to your company:

Application Assistance
- Modify a standard product
- Help define a new product

Engineering Capability
- Use of latest CAD system
- PCB layouts completed promptly
- Prototypes available two weeks after PCB layout approval

Manufacturing Capability
- Complete in-house manufacturing
- ISO 9001 Certified

Minimum Quantities
- 25 piece minimum for custom quotes
- Quotation provided at no cost

Altech Benefits
- Fast turnaround due to in-house capability
- Highly competitive in-house manufacturing
- Use of Altech components (blocks, extrusions, connectors)

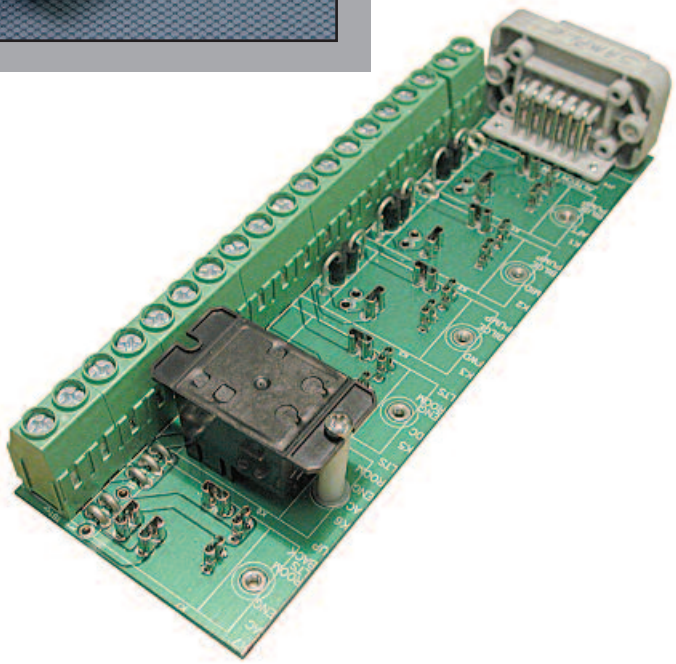

DATA SUBJECT TO CHANGE WITHOUT NOTICE

CUSTOM ASSEMBLIES AVAILABLE

Altech®

- Most competitive in industry
- Made to your specifications
- Large inventory of components
- Variety of colors available
- Shipped in 3-4 weeks

- DIN Rail Terminal Block Assemblies
- Push Button Control Stations
- Relay Assemblies
- Custom Interface Assemblies
- Enclosure Customization
- Imprinting
- Foot Switch Customization
- New Product Development
- Other Value Added Services.

DATA SUBJECT TO CHANGE WITHOUT NOTICE

INDEX

Part No.	Pg.
5492.2	20
5492.5	20
5494.2	20
5494.5	20
5502.2	20
5502.5	20
5506.2	20
5506.5	20
5508.2	20
5508.5	20
5514.2	20
5514.3	20
5514.5	20
5514.6	20
5700.2	13
5701.2	13
5702.2	11
5702.3	11
5702.4	11
5703.2	11
5703.3	11
5703.4	11
5704.2	11
5704.3	11
5704.4	11
5705.2	11
5705.3	11
5705.4	11
5706.2	11
5706.3	11
5706.4	11
5707.2	11
5707.3	11
5707.4	11
5718.2	15
5718.3	15
5719.2	15
5719.3	15
5720.2	7
5721.2	7
5722.2	7
5723.2	7
5724.2	7
5725.2	7
5726.2	7
5727.2	7
5728.2	7
5729.2	7
5740.2	8
5741.2	8
5742.2	8
5743.2	8
5744.2	8
5745.2	9
5746.2	9
5747.2	9
5748.2	9
5749.2	9
5800.2	24
5800.3	26
5801.2	24
5801.3	26
5802.2	24
5802.3	26
5803.2	24
5803.3	26
5804.2	24
5804.3	26
5805.2	24
5805.3	26
5806.2	24
5806.3	26
8835.2	12
8836.2	12

Part No.	Pg.
8837.2	12
8838.2	12
8839.2	12
8840.2	12
8842.2	11
8842.3	11
8842.4	11
8850.2	11
8850.3	11
8850.4	11
8861.0	44
8905.2	24
8905.3	26
8906.2	24
8906.3	26
8907.2	24
8907.3	26
8908.2	24
8908.3	26
8909.2	24
8909.3	26
8910.2	24
8910.3	26
8911.2	24
8911.3	26
8912.2	20
8912.3	20
8912.5	20
8912.6	20
8913.3	20
8913.6	20
8914.2	20
8914.5	20
8921.2	20
8921.5	20
8923.2	22
8923.3	22
8923.5	22
8923.6	22
8924.2	22
8924.4	22
8924.5	22
8924.6	22
8925.2	22
8925.3	22
8925.5	22
8925.6	22
8926.2	22
8926.3	22
8926.5	22
8926.6	22
8927.2	22
8927.3	22
8927.5	22
8927.6	22
8928.2	22
8928.3	22
8928.5	22
8928.6	22
8929.2	16
8929.3	16
8929.5	16
8929.6	16
8931.2	16
8931.3	16
8931.5	16
8931.6	16
8932.2	16
8932.5	16
8933.2	16
8933.3	16
8933.5	16
8933.6	16
8935.2	16

Part No.	Pg.
8935.3	16
8935.5	16
8935.6	16
8938.2	14
8939.2	14
8940.2	16
8940.3	16
8940.5	16
8940.6	16
8941.2	16
8941.3	16
8941.5	16
8941.6	16
8942.2	16
8942.3	16
8942.5	16
8942.6	16
8943.2	16
8943.3	16
8943.5	16
8943.6	16
8944.2	16
8944.5	16
8945.2	18
8945.5	18
8946.2	16
8946.5	16
8948.2	16
8948.5	16
8949.3	18
8949.6	18
8951.2	18
8951.3	18
8951.5	18
8951.6	18
8953.2	18
8953.3	18
8953.5	18
8953.6	18
8954.2	18
8954.3	18
8954.5	18
8954.6	18
8955.2	18
8955.3	18
8955.5	18
8955.6	18
8956.2	18
8956.3	18
8956.5	18
8956.6	18
8957.2	18
8957.3	18
8957.5	18
8957.6	18
8959.0	44
8959.2	18
8959.3	18
8959.5	18
8959.6	18
8963.2	18
8963.5	18
8972.2	18
8972.5	18
8973.2	11
8973.3	11
8973.4	11
8974.2	11
8974.3	11
8974.4	11
8975.2	11
8975.3	11
8975.4	11
8995.2	18

Part No.	Pg.
8995.5	18
8999.2	18
8999.5	18
125 (4.92)	30
125 (4.92)	30
125 (4.92)	30
125 (4.92)	30
156.0A01.1222C	34
156.0A01.1231C	34
156.0A01.2422C	34
156.0A01.2431C	34
156.0A11.1222C	32
156.0A11.1231C	32
156.0A11.2422C	32
156.0A11.2431C	32
156.0A12.1224C	36
156.0A12.1224C	38
156.0A12.1233C	36
156.0A12.1233C	38
156.0A12.1242C	36
156.0A12.1242C	38
156.0A12.2424C	36
156.0A12.2424C	38
156.0A12.2433C	36
156.0A12.2433C	38
156.0A12.2442C	36
156.0A12.2442C	38
156.OA03.1226C	40
156.OA03.1235C	40
156.OA03.1244C	40
156.OA03.1253C	40
156.OA03.1262C	40
156.OA03.1271C	40
156.OA03.2426C	40
156.OA03.2435C	40
156.OA03.2444C	40
156.OA03.2453C	40
156.OA03.2462C	40
156.OA03.2471C	40
248 (9.76)	30
248 (9.76)	30
248 (9.76)	30
248 (9.76)	30
256.0A01.1222C	34
256.0A01.1231C	34
256.0A01.2422C	34
256.0A01.2431C	34
256.0A11.1222C	32
256.0A11.1231C	32
256.0A11.2422C	32
256.0A11.2431C	32
256.0A12.1224C	36
256.0A12.1224C	38
256.0A12.1233C	36
256.0A12.1233C	38
256.0A12.1242C	36
256.0A12.1242C	38
256.0A12.2424C	36
256.0A12.2424C	38
256.0A12.2433C	36
256.0A12.2433C	38
256.0A12.2442C	36
256.0A12.2442C	38
456.0A01.1222C	34
456.0A01.1231C	34
456.0A01.2422C	34
456.0A01.2431C	34
456.0A11.1222C	32
456.0A11.1231C	32
456.0A11.2422C	32
456.0A11.2431C	32
456.0A12.1224C	36
456.0A12.1224C	38
456.0A12.1233C	36

BOLD - **Regular stocked items.**

DATA SUBJECT TO CHANGE WITHOUT NOTICE

INDEX

Part No.	Pg.
456.0A12.1233C	38
456.0A12.1242C	36
456.0A12.1242C	38
456.0A12.2424C	36
456.0A12.2424C	38
456.0A12.2433C	36
456.0A12.2433C	38
456.0A12.2442C	36
456.0A12.2442C	38
5492.2/S	20
5492.5/S	20
5494.2/S	20
5494.5/S	20
5502.2/S	20
5502.5/S	20
5506.2/S	20
5506.5/S	20
5508.2/S	20
5508.5/S	20
5514.2/S	20
5514.3/S	20
5514.5/S	20
5514.6/S	20
5700.2/S	13
5701.2/S	13
5718.2/S	15
5718.3/S	15
5719.2/S	15
5719.3/S	15
5720.2/S	7
5721.2/S	7
5722.2/S	7
5723.2/S	7
5724.2/S	7
5725.2/S	7
5726.2/S	7
5727.2/S	7
5728.2/S	7
5729.2/S	7
5740.2/S	8
5741.2/S	8
5742.2/S	8
5743.2/S	8
5744.2/S	8
5745.2/S	9
5746.2/S	9
5747.2/S	9
5748.2/S	9
5749.2/S	9
5800.2/S	24
5800.3/S	26
5801.2/S	24
5801.3/S	26
5802.2/S	24
5802.3/S	26
5803.2/S	24
5803.3/S	26
5804.2/S	24
5804.3/S	26
5805.2/S	24
5805.3/S	26
5806.2/S	24
5806.3/S	26
8835.2/S	12
8836.2/S	12
8837.2/S	12
8838.2/S	12
8839.2/S	12
8840.2/S	12
8905.2/S	24
8905.3/S	26
8906.2/S	24
8906.3/S	26
8907.2/S	24
8907.3/S	26
8908.2/S	24
8908.3/S	26
8909.2/S	24
8909.3/S	26
8910.2/S	24
8910.3/S	26
8911.2/S	24
8911.3/S	26
8912.2/S	20
8912.3/S	20
8912.5/S	20
8912.6/S	20
8913.3/S	20
8913.6/S	20
8914.2/S	20
8914.5/S	20
8921.2/S	20
8921.5/S	20
8923.2/S	22
8923.2C	30
8923.2N	30
8923.2S	30
8923.3/S	22
8923.3C	30
8923.3N	30
8923.3S	30
8923.5/S	22
8923.6/S	22
8924.2/S	22
8924.2C	30
8924.2N	30
8924.2S	30
8924.4/S	22
8924.4C	30
8924.4N	30
8924.4S	30
8924.5/S	22
8924.6/S	22
8925.2/S	22
8925.3/S	22
8925.5/S	22
8925.6/S	22
8926.2/S	22
8926.2C	30
8926.2N	30
8926.2S	30
8926.3/S	22
8926.3C	30
8926.3N	30
8926.3S	30
8926.5/S	22
8926.6/S	22
8927.2/S	22
8927.2C	30
8927.2N	30
8927.2S	30
8927.3/S	22
8927.3C	30
8927.3N	30
8927.3S	30
8927.5/S	22
8927.6/S	22
8928.2/S	22
8928.3/S	22
8928.5/S	22
8928.6/S	22
8929.2/S	16
8929.3/S	16
8929.5/S	16
8929.6/S	16
8931.2/S	16
8931.3/S	16
8931.5/S	16
8931.6/S	16
8932.2/S	16
8932.5/S	16
8933.2/S	16
8933.3/S	16
8933.5/S	16
8933.6/S	16
8935.2/S	16
8935.3/S	16
8935.5/S	16
8935.6/S	16
8937.2	14
8937.2/S	14
8938.2/S	14
8939.2/S	14
8940.2/S	16
8940.3/S	16
8940.5/S	16
8940.6/S	16
8941.2/S	16
8941.3/S	16
8941.5/S	16
8941.6/S	16
8942.2/S	16
8942.3/S	16
8942.5/S	16
8942.6/S	16
8943.2/S	16
8943.3/S	16
8943.5/S	16
8943.6/S	16
8944.2/S	16
8944.5/S	16
8945.2/S	18
8945.5/S	18
8946.2/S	16
8946.5/S	16
8948.2/S	16
8948.5/S	16
8949.2C	28
8949.2N	28
8949.2S	28
8949.3/S	18
8949.3C	28
8949.3N	28
8949.3S	28
8949.6/S	18
8951.2/S	18
8951.2C	28
8951.2N	28
8951.2S	28
8951.3/S	18
8951.3C	28
8951.3N	28
8951.3S	28
8951.5/S	18
8951.6/S	18
8953.2/S	18
8953.3/S	18
8953.5/S	18
8953.6/S	18
8954.0/B	42
8954.0/E	42
8954.0/G	42
8954.2/S	18
8954.3/S	18
8954.5/S	18
8954.6/S	18
8955.0/B	42
8955.0/E	42
8955.0/G	42
8955.2/S	18
8955.2C	28
8955.2N	28
8955.2S	28
8955.3/S	18
8955.3C	28
8955.3N	28
8955.3S	28
8955.5/S	18
8955.6/S	18
8956.0	44
8956.0/B	42
8956.0/E	42
8956.0/G	42
8956.2/S	18
8956.2C	28
8956.2N	28
8956.2S	28
8956.3/S	18
8956.3C	28
8956.3N	28
8956.3S	28
8956.5/S	18
8956.6/S	18
8957.0/B	42
8957.0/E	42
8957.0/G	42
8957.2/S	18
8957.3/S	18
8957.5/S	18
8957.6/S	18
8959.2/S	18
8959.3/S	18
8959.5/S	18
8959.6/S	18
8963.2/S	18
8963.2C	28
8963.2N	28
8963.2S	28
8963.5/S	18
8971.2	11
8971.3	11
8971.4	11
8972.2/S	18
8972.2C	28
8972.2N	28
8972.2S	28
8972.5/S	18
8995.2/S	18
8995.5/S	18
8999.2/S	18
8999.5/S	18
EPDP1	46
EPDP1/G	46
EPDP2	47
EPDP2/G	47
EPDR1	46
EPDR1/G	46
EPDR2	47
EPDR2/G	47
EPS	46
EPS	47
GD35	83
GD50	83
GUC11	65
GZ14U	70
GZ2	65
GZM 80	110
GZM 92	110
GZM2	55
GZM2	111
GZM3	56
GZM3	111
GZM4	56
GZM4	111
GZM80	81
GZM92	82

BOLD - **Regular stocked items.**

DATA SUBJECT TO CHANGE WITHOUT NOTICE

INDEX

Part No.	Pg.
GZMB2	57
GZMB4	57
GZMB80	83
GZP11	69
GZP8	69
GZT 80	110
GZT 92	110
GZT2	55
GZT2	111
GZT3	55
GZT3	111
GZT4	56
GZT4	111
GZT80	81
GZT92	82
GZY2G	65
M103	113
M21N	113
M21P	113
M31G*	113
M31R	113
M32G	113
M32R	113
M33G	113
M33R	113
M41G	113
M42G	113
M43G	113
M51	113
M52	113
M53	113
M61G*	113
M61R	113
M62G	113
M62R	113
M63G*	113
M63R	113
M71	113
M72	113
M73	113
M91G	113
M91R	113
M92G	113
M92R	113
M93G	113
M93R	113
MT2	46
MT2	47
MTGF1	46
MTGF1/G	46
MTGF2	47
MTGF2/G	47
MTGTK1	46
MTGTK1/1M	46
MTGTK1/1M/G	46
MTGTK1/G	46
MTGTK2	47
MTGTK2/1M	47
MTGTK2/1M/G	47
MTGTK2/G	47
PI6-1P-115VAC/DC	91
PI6-1P-12VDC	91
PI6-1P-230VAC/DC	91
PI6-1P-24VAC/DC	91
PI6-1P-24VDC	91
PI6-1P-36VDC	91
PI6-1P-42VAC/DC	91
PI6-1T-230VAC/DC	92
PI6-1T-24VAC/DC	92
PI6-1T-5...32VDC	92
PI6-OC-230VAC/DC	93
PI6-OC-24VAC/DC	93
PI6-OC-5...32VDC	93
PI84-012DC-00LD	104

Part No.	Pg.
PI84-012DC-00LV	104
PI84-024DC-00LD	104
PI84-024DC-00LV	104
PI84-110DC-00LD	104
PI84-110DC-00LV	104
PI84-110DC-M43G	104
PI84-110DC-M93G	104
PI84-120AC-00LV	104
PI84-120AC-M93G	104
PI84-12DC-M41G	104
PI84-12DC-M91G	104
PI84-230AC-00LV	104
PI84-230AC-M93G	104
PI84-24DC-M41G	104
PI84-24DC-M91G	104
PI85-012DC-00LD	105
PI85-012DC-00LV	105
PI85-024DC-00LD	105
PI85-024DC-00LV	105
PI85-110DC-00LD	105
PI85-110DC-00LV	105
PI85-110DC-M43G	105
PI85-110DC-M93G	105
PI85-120AC-00LV	105
PI85-120AC-M93G	105
PI85-12DC-M41G	105
PI85-12DC-M91G	105
PI85-230AC-00LV	105
PI85-230AC-M93G	105
PI85-24DC-M41G	105
PI85-24DC-M91G	105
PIR2-012DC-00LD	106
PIR2-012DC-00LV	106
PIR2-024DC-00LD	106
PIR2-024DC-00LV	106
PIR2-110DC-00LD	106
PIR2-110DC-00LV	106
PIR2-120AC-00LV	106
PIR2-230AC-00LV	106
PIR2M-012DC-20	109
PIR2M-024DC-20	109
PIR2M-110DC-20	109
PIR2M-115AC-20	109
PIR2M-230AC-20	109
PIR3-012DC-00LD	107
PIR3-012DC-00LV	107
PIR3-024DC-00LD	107
PIR3-024DC-00LV	107
PIR3-110DC-00LD	107
PIR3-110DC-00LV	107
PIR3-120AC-00LV	107
PIR3-230AC-00LV	107
PIR4-012DC-00LD	108
PIR4-012DC-00LV	108
PIR4-024DC-00LD	108
PIR4-024DC-00LV	108
PIR4-110DC-00LD	108
PIR4-110DC-00LV	108
PIR4-120AC-00LV	108
PIR4-230AC-00LV	108
PIR6W-1PS-115VAC/DC-C	97
PIR6W-1PS-115VAC/DC-O	97
PIR6W-1PS-115VAC/DC-R	96
PIR6W-1PS-115VAC/DC-R01	96
PIR6W-1PS-115VAC/DC-T	97
PIR6W-1PS-12VDC-C	97
PIR6W-1PS-12VDC-O	97
PIR6W-1PS-12VDC-R	96
PIR6W-1PS-12VDC-R01	96
PIR6W-1PS-12VDC-T	97
PIR6W-1PS-230VAC/DC-C	97
PIR6W-1PS-230VAC/DC-O	97
PIR6W-1PS-230VAC/DC-R	96
PIR6W-1PS-230VAC/DC-R01	96

Part No.	Pg.
PIR6W-1PS-24VAC/DC-C	97
PIR6W-1PS-24VAC/DC-O	97
PIR6W-1PS-24VAC/DC-R	96
PIR6W-1PS-24VAC/DC-R01	96
PIR6W-1PS-24VAC/DC-T	97
PIR6W-1PS-24VDC-C	97
PIR6W-1PS-24VDC-O	97
PIR6W-1PS-24VDC-R	96
PIR6W-1PS-24VDC-R01	96
PIR6W-1PS-24VDC-T	97
PIR6W-1PS-36VDC-C	97
PIR6W-1PS-36VDC-O	97
PIR6W-1PS-36VDC-R	96
PIR6W-1PS-36VDC-R01	96
PIR6W-1PS-36VDC-T	97
PIR6W-1PS-42VAC/DC-C	97
PIR6W-1PS-42VAC/DC-O	97
PIR6W-1PS-42VAC/DC-R	96
PIR6W-1PS-42VAC/DC-R01	96
PIR6W-1PS-42VAC/DC-T	97
PIR6W-1PS-48VDC-C	97
PIR6W-1PS-48VDC-O	97
PIR6W-1PS-48VDC-R	96
PIR6W-1PS-48VDC-R01	96
PIR6W-1PS-48VDC-T	97
PIR6W-1PS-60VDC-C	97
PIR6W-1PS-60VDC-O	97
PIR6W-1PS-60VDC-R	96
PIR6W-1PS-60VDC-R01	96
PIR6W-1PS-60VDC-T	97
PIR6W-1PS-6VDC-C	97
PIR6W-1PS-6VDC-O	97
PIR6W-1PS-6VDC-R	96
PIR6W-1PS-6VDC-R01	96
PIR6W-1PS-6VDC-T	97
PIR6WB-1PS-115VAC/DC-C	101
PIR6WB-1PS-115VAC/DC-O	101
PIR6WB-1PS-115VAC/DC-R	100
PIR6WB-1PS-115VAC/DC-R01	100
PIR6WB-1PS-115VAC/DC-T	101
PIR6WB-1PS-12VDC-C	101
PIR6WB-1PS-12VDC-O	101
PIR6WB-1PS-12VDC-R	100
PIR6WB-1PS-12VDC-R01	100
PIR6WB-1PS-12VDC-T	101
PIR6WB-1PS-230VAC/DC-C	101
PIR6WB-1PS-230VAC/DC-O	101
PIR6WB-1PS-230VAC/DC-R	100
PIR6WB-1PS-230VAC/DC-R01	100
PIR6WB-1PS-24VAC/DC-C	101
PIR6WB-1PS-24VAC/DC-O	101
PIR6WB-1PS-24VAC/DC-R	100
PIR6WB-1PS-24VAC/DC-R01	100
PIR6WB-1PS-24VAC/DC-T	101
PIR6WB-1PS-24VDC-C	101
PIR6WB-1PS-24VDC-O	101
PIR6WB-1PS-24VDC-R	100
PIR6WB-1PS-24VDC-R01	100
PIR6WB-1PS-24VDC-T	101
PIR6WB-1PS-36VDC-C	101
PIR6WB-1PS-36VDC-O	101
PIR6WB-1PS-36VDC-R	100
PIR6WB-1PS-36VDC-R01	100
PIR6WB-1PS-36VDC-T	101
PIR6WB-1PS-42VAC/DC-C	101
PIR6WB-1PS-42VAC/DC-O	101
PIR6WB-1PS-42VAC/DC-R	100
PIR6WB-1PS-42VAC/DC-R01	100
PIR6WB-1PS-42VAC/DC-T	101
PIR6WB-1PS-48VDC-C	101
PIR6WB-1PS-48VDC-O	101
PIR6WB-1PS-48VDC-R	100
PIR6WB-1PS-48VDC-R01	100
PIR6WB-1PS-48VDC-T	101

Part No.	Pg.
PIR6WB-1PS-60VDC-C	101
PIR6WB-1PS-60VDC-O	101
PIR6WB-1PS-60VDC-R	100
PIR6WB-1PS-60VDC-R01	100
PIR6WB-1PS-60VDC-T	101
PIR6WB-1PS-6VDC-C	101
PIR6WB-1PS-6VDC-O	101
PIR6WB-1PS-6VDC-R	100
PIR6WB-1PS-6VDC-R01	100
PIR6WB-1PS-6VDC-T	101
PZ11	70
PZ8	69
R15-1014-23-1012	68
R15-1014-23-1012-D	68
R15-1014-23-1012-K	68
R15-1014-23-1012-L	68
R15-1014-23-1024	68
R15-1014-23-1024-D	68
R15-1014-23-1024-K	68
R15-1014-23-1024-L	68
R15-1014-23-1110	68
R15-1014-23-1110-D	68
R15-1014-23-1110-K	68
R15-1014-23-1110-L	68
R15-1014-23-3024	68
R15-1014-23-3024-D	68
R15-1014-23-3024-K	68
R15-1014-23-3024-L	68
R15-1014-23-3120	68
R15-1014-23-3120-D	68
R15-1014-23-3120-K	68
R15-1014-23-3120-L	68
R15-1014-23-3230	68
R15-1014-23-3230-D	68
R15-1014-23-3230-K	68
R15-1014-23-3230-L	68
R15-1014-23-6120	68
R15-1014-23-6120-D	68
R15-1014-23-6120-K	68
R15-1014-23-6120-L	68
R15-1014-23-6230	68
R15-1014-23-6230-D	68
R15-1014-23-6230-K	68
R15-1014-23-6230-L	68
R15-2012-23-1012	68
R15-2012-23-1012-WT	68
R15-2012-23-1012-WTL	68
R15-2012-23-1024	68
R15-2012-23-1024-WT	68
R15-2012-23-1024-WTL	68
R15-2012-23-1110	68
R15-2012-23-1110-WT	68
R15-2012-23-1110-WTL	68
R15-2012-23-5024	68
R15-2012-23-5024-WT	68
R15-2012-23-5024-WTL	68
R15-2012-23-5120	68
R15-2012-23-5120-WT	68
R15-2012-23-5120-WTL	68
R15-2012-23-5230	68
R15-2012-23-5230-WT	68
R15-2012-23-5230-WTL	68
R15-2013-23-1012	68
R15-2013-23-1012-WT	68
R15-2013-23-1012-WTL	68
R15-2013-23-1024	68
R15-2013-23-1024-WT	68
R15-2013-23-1024-WTL	68
R15-2013-23-1110	68
R15-2013-23-1110-WT	68
R15-2013-23-1110-WTL	68
R15-2013-23-5024	68
R15-2013-23-5024-WT	68
R15-2013-23-5024-WTL	68

BOLD - Regular stocked items.

DATA SUBJECT TO CHANGE WITHOUT NOTICE

INDEX

Part No.	Pg.
R15-2013-23-5120	68
R15-2013-23-5120-WT	68
R15-2013-23-5120-WTL	68
R15-2013-23-5230	68
R15-2013-23-5230-WT	68
R15-2013-23-5230-WTL	68
R2M-2012-23-1012	62
R2M-2012-23-1024	62
R2M-2012-23-1110	62
R2M-2012-23-5120	62
R2M-2012-23-5230	62
R2N-2012-23-1012-WT	54
R2N-2012-23-1012-WTL	54
R2N-2012-23-1024-WT	54
R2N-2012-23-1024-WTL	54
R2N-2012-23-1110-WT	54
R2N-2012-23-1110-WTL	54
R2N-2012-23-5024-WT	54
R2N-2012-23-5024-WTL	54
R2N-2012-23-5120-WT	54
R2N-2012-23-5120-WTL	54
R2N-2012-23-5230-WT	54
R2N-2012-23-5230-WTL	54
R3N-2013-23-1012-WT	54
R3N-2013-23-1012-WTL	54
R3N-2013-23-1024-WT	54
R3N-2013-23-1024-WTL	54
R3N-2013-23-1110-WT	54
R3N-2013-23-1110-WTL	54
R3N-2013-23-5024-WT	54
R3N-2013-23-5024-WTL	54
R3N-2013-23-5120-WT	54
R3N-2013-23-5120-WTL	54
R3N-2013-23-5230-WT	54
R3N-2013-23-5230-WTL	54
R4N-2014-23-1012-WT	54
R4N-2014-23-1012-WTL	54
R4N-2014-23-1024-WT	54
R4N-2014-23-1024-WTL	54
R4N-2014-23-1110-WT	54
R4N-2014-23-1110-WTL	54
R4N-2014-23-5024-WT	54
R4N-2014-23-5024-WTL	54
R4N-2014-23-5120-WT	54
R4N-2014-23-5120-WTL	54
R4N-2014-23-5230-WT	54
R4N-2014-23-5230-WTL	54
RM40-2011-85-1003	75
RM40-2011-85-1005	75
RM40-2011-85-1006	75
RM40-2011-85-1009	75
RM40-2011-85-1012	75
RM40-2011-85-1024	75
RM40-2011-85-1048	75
RM40-3021-85-1003	75
RM40-3021-85-1005	75
RM40-3021-85-1006	75
RM40-3021-85-1009	75
RM40-3021-85-1012	75
RM40-3021-85-1024	75
RM40-3021-85-1048	75
RM50-3011-85-1003	75
RM50-3011-85-1005	75
RM50-3011-85-1006	75
RM50-3011-85-1009	75
RM50-3011-85-1012	75
RM50-3011-85-1018	75
RM50-3011-85-1024	75
RM50-3011-85-1048	75
RM50-3021-85-1003	75
RM50-3021-85-1005	75
RM50-3021-85-1006	75
RM50-3021-85-1009	75
RM50-3021-85-1012	75
RM50-3021-85-1018	75
RM50-3021-85-1024	75
RM50-3021-85-1048	75
RM50-3021-85-1060	75
RM699BV-3011-85-1005	88
RM699BV-3011-85-1012	88
RM699BV-3011-85-1024	88
RM699BV-3011-85-1048	88
RM699BV-3011-85-1060	88
RM699BV-3211-85-1005	88
RM699BV-3211-85-1012	88
RM699BV-3211-85-1024	88
RM699BV-3211-85-1048	88
RM699BV-3211-85-1060	88
RM84-2012-35-1012	80
RM84-2012-35-1024	80
RM84-2012-35-1110	80
RM84-2012-35-5120	80
RM84-2012-35-5230	80
RM84-2022-35-1012	80
RM84-2022-35-1024	80
RM84-2022-35-1110	80
RM84-2022-35-5120	80
RM84-2022-35-5230	80
RM85-2011-35-1012	80
RM85-2011-35-1024	80
RM85-2011-35-1110	80
RM85-2011-35-5120	80
RM85-2011-35-5230	80
RM85-2021-35-1012	80
RM85-2021-35-1024	80
RM85-2021-35-1110	80
RM85-2021-35-5120	80
RM85-2021-35-5230	80
RM87N-2011-35-1012	80
RM87N-2011-35-1024	80
RM87N-2011-35-1110	80
RM87N-2011-35-5120	80
RM87N-2011-35-5230	80
RM87N-2021-35-1012	80
RM87N-2021-35-1024	80
RM87N-2021-35-1110	80
RM87N-2021-35-5120	80
RM87N-2021-35-5230	80
RS35-3022-25-1012	103
RS35-3022-25-1024	103
RS35-3022-25-1110	103
RS50-3022-25-1012	103
RS50-3022-25-1024	103
RS50-3022-25-1110	103
RSR30-D05-A1-24-020-1	84
RSR30-D05-D1-02-040-1	86
RSR30-D05-D1-04-025-1	85
RSR30-D05-D1-24-010-1	87
RSR30-D12-A1-24-020-1	84
RSR30-D12-D1-02-040-1	86
RSR30-D12-D1-04-025-1	85
RSR30-D12-D1-24-010-1	87
RSR30-D24-A1-24-020-1	84
RSR30-D24-D1-02-040-1	86
RSR30-D24-D1-04-025-1	85
RSR30-D24-D1-24-010-1	87
RSR30-D48-D1-02-040-1	86
RSR30-D48-D1-04-025-1	85
RSR30-D48-D1-24-010-1	87
RUC-2012-26-1012	62
RUC-2012-26-1012-K	62
RUC-2012-26-1012-KL	62
RUC-2012-26-1012-L	62
RUC-2012-26-1024	62
RUC-2012-26-1024-K	62
RUC-2012-26-1024-KL	62
RUC-2012-26-1024-L	62
RUC-2012-26-1110	62
RUC-2012-26-1110-K	62
RUC-2012-26-1110-KL	62
RUC-2012-26-1110-L	62
RUC-2012-26-5120	62
RUC-2012-26-5120-K	62
RUC-2012-26-5120-KL	62
RUC-2012-26-5120-L	62
RUC-2012-26-5230	62
RUC-2012-26-5230-K	62
RUC-2012-26-5230-KL	62
RUC-2012-26-5230-L	62
RUC-2013-26-1012	63
RUC-2013-26-1012-K	63
RUC-2013-26-1012-KL	63
RUC-2013-26-1012-L	63
RUC-2013-26-1024	63
RUC-2013-26-1024-K	63
RUC-2013-26-1024-KL	63
RUC-2013-26-1024-L	63
RUC-2013-26-1110	63
RUC-2013-26-1110-K	63
RUC-2013-26-1110-KL	63
RUC-2013-26-1110-L	63
RUC-2013-26-5120	63
RUC-2013-26-5120-K	63
RUC-2013-26-5120-KL	63
RUC-2013-26-5120-L	63
RUC-2013-26-5230	63
RUC-2013-26-5230-K	63
RUC-2013-26-5230-KL	63
RUC-2013-26-5230-L	63
RUC-2022-26-1012	63
RUC-2022-26-1012-K	63
RUC-2022-26-1012-KL	63
RUC-2022-26-1012-L	63
RUC-2022-26-1024	63
RUC-2022-26-1024-K	63
RUC-2022-26-1024-KL	63
RUC-2022-26-1024-L	63
RUC-2022-26-1110	63
RUC-2022-26-1110-K	63
RUC-2022-26-1110-KL	63
RUC-2022-26-1110-L	63
RUC-2022-26-5120	63
RUC-2022-26-5120-K	63
RUC-2022-26-5120-KL	63
RUC-2022-26-5120-L	63
RUC-2022-26-5230	63
RUC-2022-26-5230-K	63
RUC-2022-26-5230-KL	63
RUC-2022-26-5230-L	63
RUC-2023-26-1012	63
RUC-2023-26-1012-K	63
RUC-2023-26-1012-KL	63
RUC-2023-26-1012-L	63
RUC-2023-26-1024	63
RUC-2023-26-1024-K	63
RUC-2023-26-1024-KL	63
RUC-2023-26-1024-L	63
RUC-2023-26-1110	63
RUC-2023-26-1110-K	63
RUC-2023-26-1110-KL	63
RUC-2023-26-1110-L	63
RUC-2023-26-5120	63
RUC-2023-26-5120-K	63
RUC-2023-26-5120-KL	63
RUC-2023-26-5120-L	63
RUC-2023-26-5230	63
RUC-2023-26-5230-K	63
RUC-2023-26-5230-KL	63
RUC-2023-26-5230-L	63
RUC-2052-26-1012	64
RUC-2052-26-1012-K	64
RUC-2052-26-1012-KL	64
RUC-2052-26-1012-L	64
RUC-2052-26-1024	64
RUC-2052-26-1024-K	64
RUC-2052-26-1024-KL	64
RUC-2052-26-1024-L	64
RUC-2052-26-1110	64
RUC-2052-26-1110-K	64
RUC-2052-26-1110-KL	64
RUC-2052-26-1110-L	64
RUC-2052-26-5120	64
RUC-2052-26-5120-K	64
RUC-2052-26-5120-KL	64
RUC-2052-26-5120-L	64
RUC-2052-26-5230	64
RUC-2052-26-5230-K	64
RUC-2052-26-5230-KL	64
RUC-2052-26-5230-L	64
RUC-2053-26-1012	64
RUC-2053-26-1012-K	64
RUC-2053-26-1012-KL	64
RUC-2053-26-1012-L	64
RUC-2053-26-1024	64
RUC-2053-26-1024-K	64
RUC-2053-26-1024-KL	64
RUC-2053-26-1024-L	64
RUC-2053-26-1110	64
RUC-2053-26-1110-K	64
RUC-2053-26-1110-KL	64
RUC-2053-26-1110-L	64
RUC-2053-26-5120	64
RUC-2053-26-5120-K	64
RUC-2053-26-5120-KL	64
RUC-2053-26-5120-L	64
RUC-2053-26-5230	64
RUC-2053-26-5230-K	64
RUC-2053-26-5230-KL	64
RUC-2053-26-5230-L	64
RY2-2012-26-1012	62
RY2-2012-26-1012-D	62
RY2-2012-26-1012-L	62
RY2-2012-26-1012-LD	62
RY2-2012-26-1024	62
RY2-2012-26-1024-D	62
RY2-2012-26-1024-L	62
RY2-2012-26-1024-LD	62
RY2-2012-26-1110	62
RY2-2012-26-1110-D	62
RY2-2012-26-1110-L	62
RY2-2012-26-1110-LD	62
RY2-2012-26-5024	62
RY2-2012-26-5024-D	62
RY2-2012-26-5024-L	62
RY2-2012-26-5024-LD	62
RY2-2012-26-5120	62
RY2-2012-26-5120-D	62
RY2-2012-26-5120-L	62
RY2-2012-26-5120-LD	62
RY2-2012-26-5230	62
RY2-2012-26-5230-D	62
RY2-2012-26-5230-L	62
RY2-2012-26-5230-LD	62

BOLD - **Regular stocked items.**

DATA SUBJECT TO CHANGE WITHOUT NOTICE

STANDARD TERMS AND CONDITIONS OF SALE

TITLE - Title to the products of ALTECH shall remain with ALTECH until payment is made in full by Customer. Such reservation of title is for the purpose of securing the purchase price and shall not relieve Customer of the duty to inspect the products upon receipt, to notify ALTECH of any deficiencies or defects, and to exercise due care in the use, installation, operation, and maintenance of the products when on the premise of the Customer or under the control of the Customer. Notwithstanding any reservation of title by ALTECH, risk of loss shall pass to customer at any time of shipment.

SHIPMENT AND DELIVERY - All orders for destination in the mainland United States (less Hawaii, Alaska and non-continental United States possessions) will be shipped F.O.B. Flemington, N.J. All destination, shipping and other charges shall be paid by the Customer in accordance with ALTECH's then current shipping and billing practices.

Delivery dates given in the acceptance of any order are approximate. ALTECH shall not be liable for delays in delivery or in performance due to causes beyond its reasonable control including acts of God, acts of Customer, acts of civil or military authority, fires, strikes or other labor disturbances, war, riot or delays in transportation. In the event of such delay, the date of delivery or performance shall be extended for a period equal to the time lost by reason of the delay.

PRICE - PRICES in any ALTECH publication are subject to change without prior notification. Catalog prices are based on prices published in the current price list. All written quotations are valid for thirty (30) days from the date of quotation. Customer shall pay all sales, use, excise or similar taxes whenever ALTECH must itself pay and/or collect such tax from Customer arising out of the sale.

PAYMENT - Customer agrees to make payment within thirty (30) days of date of the invoice from ALTECH. Customer agrees to pay a late payment charge of one and one-half percent (1.5% per month, or the maximum late payment charge permitted by applicable law, whichever is less, on any unpaid amount for each calendar month (or fraction thereof) that such payment is in default. Orders amounting to less than $100.00 will be billed at $100.00 plus freight. Full carton purchases are required. In the event of referral to an attorney for collection, reasonable attorney's fees for collection of the overdue amount shall be paid by Customer. In the event payment is not received within 30 days from the date of invoice, any discount shall be cancelled and the full list price will be due.

LIMITED WARRANTY - ALTECH warrants to Customer that the equipment purchases shall be free from defects in material and workmanship under normal use and service for a period of one year from shipment.

Written notice as an explanation of the circumstances of any claim that the equipment has proved defective in material or workmanship shall be given promptly by the Customer to ALTECH.

ALTECH will not be liable for any misuse, improper operations, improper installation, improper maintenance, alteration, modification, accident or unusual degradation of the equipment or parts due to an unsuitable installation environment.

No representation of other affirmation of facts, including but not limited to statements regarding capacity, suitability for use or performance of the equipment, shall be or be deemed to be a warranty or representation by ALTECH for any purpose, nor give rise to any liability or obligation of ALTECH whatsoever.

Customer's sole and exclusive remedy in the event of breach of warranty, as set forth herein, is expressly limited to (1) the correction of the defect by adjustment, repair, modification, or replacement, or (2) issuance of a credit or refund of the purchase price for the defective equipment at ALTECH's election and sole expense.

EXCEPT AS SPECIFICALLY PROVIDED IN THIS AGREEMENT, THERE ARE NO OTHER WARRANTIES EXPRESSED OR IMPLIED INCLUDING BUT NOT LIMITED TO ANY IMPLIED WARRANTIES OR MERCHANTABILITY OR FITNESS FOR A PARTICULAR PURPOSE.

THIS WARRANTY EXTENDS ONLY TO THE CUSTOMER FROM ALTECH OR ITS AUTHORIZED DISTRIBUTOR.

LIMITATION OF LIABILITY - IN NO EVENT, SHALL ALTECH BE LIABLE FOR LOSS OF PROFITS, INDIRECT, SPECIAL, CONSEQUENTIAL OR OTHER SIMILAR DAMAGES ARISING OUT OF ANY BREACH OF THIS AGREEMENT OR OBLIGATIONS UNDER THE AGREEMENT.

ALTECH SHALL NOT BE LIABLE FOR ANY DAMAGES CAUSED BY DELAY IN SHIPMENT, INSTALLATION OR FURNISHING OF EQUIPMENT OR SERVICES UNDER THIS AGREEMENT.

No action arising out of any claimed breach of this Agreement may be brought by either party more than two (2) years after the cause of action has accrued.

PATENT INDEMNITY - ALTECH shall defend or settle any suit or proceeding brought against Customer based on a claim that any equipment made to ALTECH design and furnished hereunder constitutes an infringement of any existing United States patent, provided (ALTECH) is notified promptly in writing and is given complete authorization and information required for the defense, and ALTECH shall pay all damages and costs awarded against Customer, but shall not be responsible for any costs, expense or compromise incurred or made by Customer without ALTECH's prior written consent. If any equipment is in ALTECH's opinion likely to or does become the subject of a claim for patent infringement, ALTECH may at its option and expense procure for Customer the right to continue using the device, modify it to become non-infringing, but in the event ALTECH is not reasonably able to modify, substitute, or otherwise procure for Customer the right to continue using it, ALTECH will remove such equipment and refund to Customer the amount paid in excess of a reasonable rental for past use.

ALTECH shall not be liable for any infringement or claim based upon use of the equipment in combination with other equipment not supplied by ALTECH or with modifications made by Customer.

The foregoing states the entire liability of ALTECH to Customer arising from patent infringement.

SELLER'S REMEDIES - Should Customer fail to make any payment within ten (10) days of its due date, or fail to perform any other of the Customer's obligation hereunder upon thirty (30) days written notice, or should Customer be or become insolvent or be a party to any bankruptcy receivership proceeding prior to full payment of all amounts payable hereunder, ALTECH may: (a) with or without demand or notice to customer declare the entire amount unpaid immediately due and payable; (b) enter upon the premises where the equipment may be found and remove it (Customer shall assemble the equipment and make it available to ALTECH at a place reasonably convenient to both parties and shall permit and assist ALTECH in effecting the retaking and removal of the equipment); and (c) sell any or all the equipment as permitted under applicable law, applying the proceeds of the sale to payment of the expenses of retaking, repairing and selling the equipment, reasonable attorney fees and to the satisfaction of all indebtedness then due and unpaid under this Agreement. Any surplus shall be paid to Customer and any deficiency shall be paid to ALTECH by Customer.

The remedies provided herein shall be cumulative and in addition to all other remedies provided by law or equity or under the Uniform Commercial Code.

GOVERNING LAW - This agreement will be governed by the Laws of the State of New Jersey.

GENERAL - This Agreement shall only become effective and binding when either (a) it has been accepted and executed by an authorized representative of ALTECH, or (b) the equipment has been shipped to Customer, with or without acceptance in writing hereon. Notice of acceptance is hereby waived by Customer. Customer hereby acknowledges receipt of a true and complete copy hereof.

No addition to or modification of any of the Terms and Conditions of Sale as they appear herein shall be binding upon ALTECH unless signed in writing by duly authorized representative of ALTECH in Flemington, N.J.

Typographical and clerical errors in quotations, orders and acknowledgments are subject to correction.

This Agreement is not assignable without the prior written consent of ALTECH. Any attempt to assign any of the rights, duties or obligations of this Agreement without such consent is void.

If any provision or provisions of this Agreement shall be held to be invalid, illegal or unenforceable, the validity, legality and enforceability, of the remaining provisions shall not in any way be affected or impaired thereby.

ALTECH is not responsible for failure to fulfill its obligation under this Agreement due to causes beyond its control, or except as agreed herein.

THE CUSTOMER ACKNOWLEDGES THAT HE HAS READ THE AGREEMENT, UNDERSTANDS IT, AND AGREES TO BE BOUND BY ITS TERMS AND CONDITIONS. FURTHERMORE, THE CUSTOMER AGREES THAT IT IS THE COMPLETE AND EXCLUSIVE STATEMENT OF THE AGREEMENT BETWEEN THE PARTIES, WHICH SUPERSEDES ALL PROPOSALS OR PRIOR AGREEMENTS, ORAL OR WRITTEN, EXPRESSED OR IMPLIED, AND ALL OTHER COMMUNICATIONS BETWEEN THE PARTIES RELATING TO THE SUBJECT MATTER OF THIS AGREEMENT.

HERE ARE OTHER GREAT PRODUCTS AVAILABLE FROM ALTECH

Altech®

Circuit Protection Devices

Altech the market leader in UL508 Manual Motor Controllers/ Miniature Circuit Breakers now introduces UL489 Miniature Circuit Breakers and UL1077 Supplementary Protectors. The UL489 versions are DIN rail mounted, 17.5mm wide, thermal magnetic, 240V, 480Y/277V AC, 50/60Hz, 125 and 250 VDC models, with short circuit interrupt capacity of 10kA, a positive trip indicator, and are line/load reversible. The UL1077 versions are DIN rail mounted, 17.5mm wide, thermal magnetic, 480Y/277V AC, 50/60Hz, a short circuit withstand capacity 10kA, have a positive trip indicator.

Altech Corp.®
35 Royal Rd., Flemington, NJ 08822
908-806-9400
FAX 908-806-9490
www.altechcorp.com

Metallic Push Buttons and Selector Switches

Altech 22 and 30 mm Push Buttons offer ideal cost-effective solutions for control circuits utilizing both direct and remote management applications. Ease of assembly has been engineered into the design; the only tool necessary for installation is a screwdriver.

- LED Indicating Devices
- Pilot Lights
- Push Button Stations
- Push Button Enclosures
- UL Recognized
- Custom Push Button Assemblies
- All Very Competitively Priced

Altech Corp.®
35 Royal Rd., Flemington, NJ 08822
908-806-9400
FAX 908-806-9490
www.altechcorp.com

Contactors and More!

Altech's now carries contactors, mini contactors, definite purpose contactors & overload relays. The contactors come in 3 and 4 pole configurations at 9A to 800A. Available in Single Phase (115 -230V) and Three Phase (200 - 575V) AC and DC models. A large variety of coil voltages are supported and the accessories are auxiliary contacts and overload relays. The mini contactors come in screw clamp, fast-on, cage clamp and solder pin types.

Altech Corp.®
35 Royal Rd., Flemington, NJ 08822
908-806-9400
www.altechcorp.com

Terminal Blocks

Altech offers a NEW Terminal Block catalog with the most competitively priced blocks in the industry. We feature screw and spring clamp models for DIN rail and panel mount applications. This advanced line of wire termination products will increase your design options and help to get the job done more efficiently. Our line of blocks include feed-through (single, double or triple level), distribution, ground, fuse, disconnect, thermocouple, surge suppressor and indicator. A wide variety of accessories, tools and ferrules are available.

Altech Corp.®
35 Royal Rd., Flemington, NJ 08822
908-806-9400
FAX 908-806-9490
www.altechcorp.com

Industrial Enclosures

Altech's expanded line of TK Industrial Enclosures, with metric knockouts, is here. Now our entire line of industrial enclosures is in metric. Metric knockouts align with international standards making selection easier and more universal. Plus the PG standard is still available. All of Altech's enclosures are internationally accepted and stand up to the harshest environments. They protect against dust, water and corrosion while enhancing the value of your product. Rated up to IP66 (NEMA type 4x), Altech enclosures are available in a wide range of sizes.

Altech Corp.®
35 Royal Rd., Flemington, NJ 08822
908-806-9400
www.altechcorp.com

DIN Rail Power Supplies

Altech DIN RAIL mountable power supplies have Universal AC input. They are suitable for industrial and automation applications.

- UL508 Listed
- Installed on DIN rail TS35/ 7.5 or 15
- Available from 20-960W
- Protections: Short circuit / Overload / Over-voltage / Over temperature
- Cooling by free air convection
- Worldwide approvals
- 3 year warranty

Altech Corp.®
35 Royal Rd., Flemington, NJ 08822
908-806-9400
FAX 908-806-9490
www.altechcorp.com

DATA SUBJECT TO CHANGE WITHOUT NOTICE

altechcorp.com

Altech Corporation
35 Royal Road
Flemington, NJ 08822-6000
P 908.806.9400 • F 908.806.9490
www.altechcorp.com

Altech Corp.® 410-112013-5M
Printed November 2013