# Altech Corp.®

*Serving the Automation & Control Industry since 1984*

Quality System

Quality Endorsed Company

# Interface Modules & Industrial Relays

# Altech Corp.®

Since 1984, Altech Corporation has grown to become a leading supplier of automation and industrial control components. Headquartered in Flemington, NJ, Altech has an experienced staff of engineering, manufacturing and sales personnel to provide the highest quality products with superior service. This is the Altech Commitment!

With experienced Product Engineers and Customer Service personnel, Altech provides solutions to your most pressing application challenges. All with one thought in mind - ***to ensure that we solve your problem the first time!***

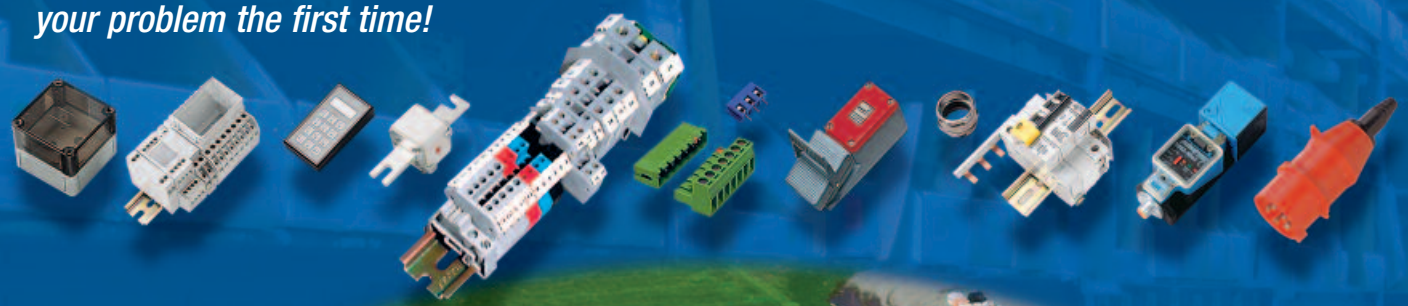

## Quality Commitment

*Altech's control components meet diverse national and international standards such as UL, NEC, CSA, IEC, VDE and more. Altech provides superior customer service and delivery through Total Quality Management and Continuous Process Improvement. Altech is ISO 9001 approved. We perform these services with honesty and integrity and are committed to achieve these goals.*

# TABLE OF CONTENTS

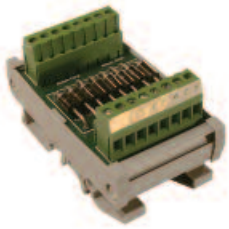

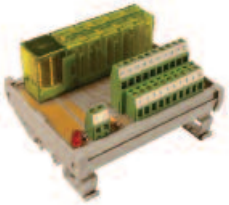

**INTERFACE MODULES INTRODUCTION** ..... 4-5

**Connector to Terminal Block Modules** ..... 6-9

**Diode Modules & Component Carriers** ..... 10-14

**Wire to RJ45 Module** ..... 15

**Interface Relay Modules and Carriers** ..... 16-23

**Interfaces, High Current Isolated** ..... 24-27

**Safety Relay Modules** ..... 28-41

**Interfaces** ..... 42-45

**PCB Mounting Tracks** ..... 46-47

**INDUSTRIAL RELAYS INTRODUCTION** ..... 48-49

**Industrial Electromagnetic Relays** ..... 50-71

**Miniature Electromagnetic Relays** ..... 72-83

**Slimline Interface Relays** ..... 84-89

**Subminiature Electromagnetic and Solid State Relays** ..... 90-101

**Relays for Photovoltaic Systems** ..... 102-103

**Relay Socket Combination** ..... 104-109

**Industrial Relay Accessories** ..... 110-115

**Index** ..... 118-121

**Terms & Conditions** ..... 122

# INTERFACE MODULES

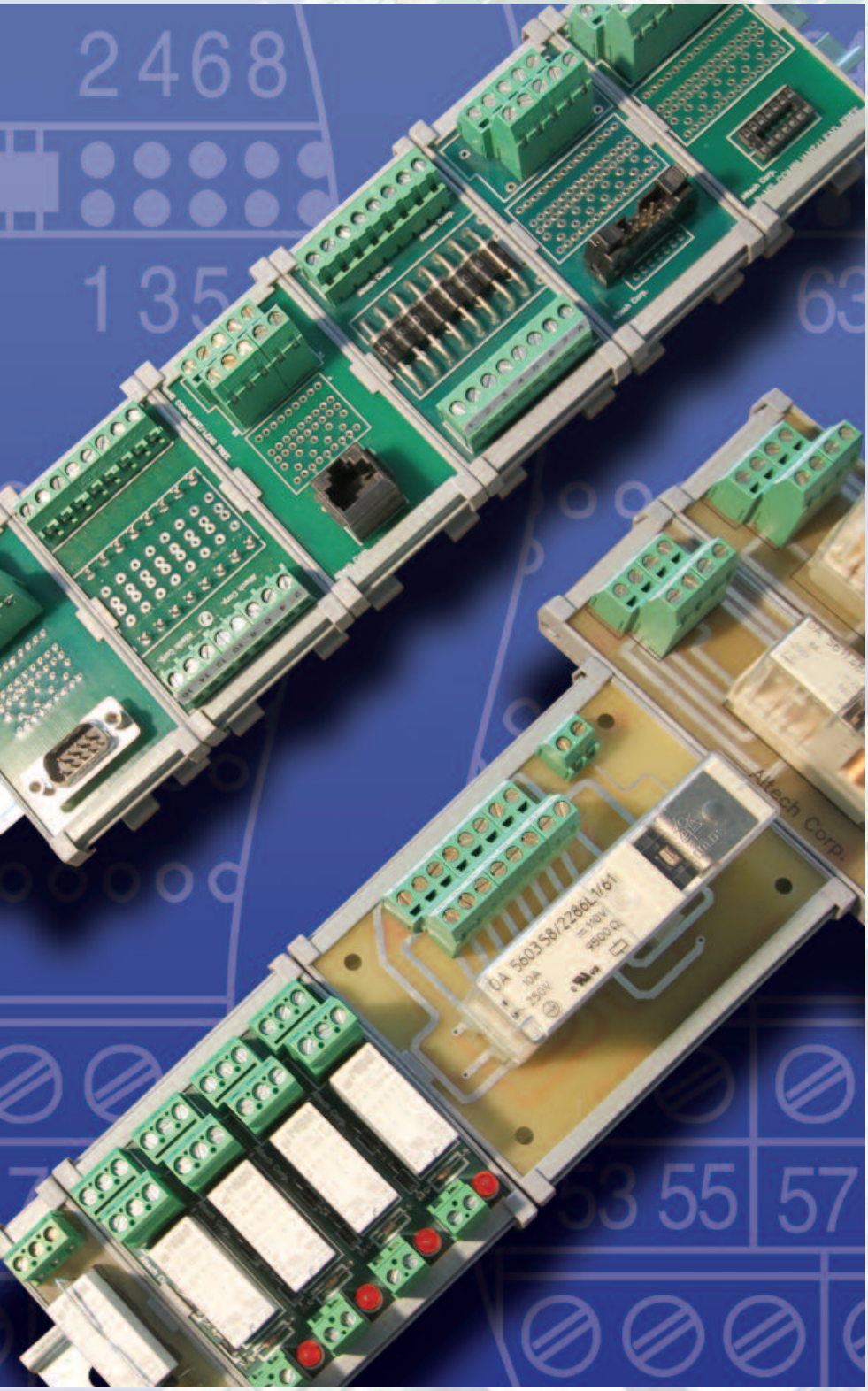

Link incompatible hardware or expand the capabilities of logic systems with Altech interface and electronic modules and carriers. These DIN Rail or panel mounted printed circuit board modules, subsystems and carriers give design flexibility, simplify panel layouts and reduce maintenance and downtime.

Altech's compact interface modules provide a flexible, cost effective transition from Sub-D, Ribbon Cable and other connectors to terminal blocks.

Altech's electronic modules include Diode, Fuse, Varistor, Optocoupler (I/O), Relay, power supplies and custom modules.

If your needs go beyond our comprehensive range of standard interface and electronic modules, Altech can custom design a module to meet even the most sophisticated requirements.

Modules are supplied completely assembled with ready to wire screw-cage terminal blocks in an extruded track. The track can be mounted on 35 or 32mm DIN Rail or can be panel mounted. Select individual components and mount your own electronic boards with Altech mounting tracks.



DATA SUBJECT TO CHANGE WITHOUT NOTICE

## Connector-To-Terminal Block

Compact and reliable transitions between high density connectors and high quality screw-cage clamp terminal blocks.

- FBK Ribbon Cable, up to 64 poles
- Subminiature - D, up to 50 poles

## Miniature Relays

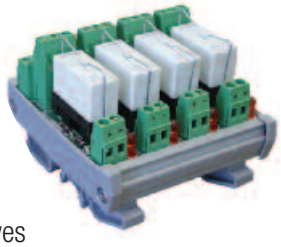

Traditional relay and safety relay modules in a high density package.

- Protect equipment
- Provide insulation
- Control motors, solenoid and valves
- Safety relays for emergency stop, safety gate and two-hand stop

## Diode Modules & Component Carriers

Use our Diode Modules to build lamp test circuits, decouple signals, etc. Mount your own components into our Component Carriers (supplied without electronic components). Or, tell us what you need and we'll install it for you.

- DM Diode Modules have series connection 1A or 3A diodes, and 1A diode gates with common cathodes or anodes, providing commonly used diode arrangements
- BSM Component Carrier has factory installed fork-and eyelet soldering posts in each series trace
- CCA Component Carrier consists of a printed circuit board with four in-line and two bus-connection through-holes to solder pads in each trace, complete with terminal blocks

## Custom Interface Modules

If your design or application requires more functionality or features than our standard product, Altech offers complete engineering, prototype and production services for custom modules.

Our staff has the ability to take your design or requirements and manufacture your custom module. Custom module production generally includes engineering, PCB layout and prototypes, packaged in Altech extrusions for mounting on panels or DIN Rail. In many industrial control systems, customized designs are the solution for many problems.

Altech provides a quick turnaround and competitive solution to your problem.

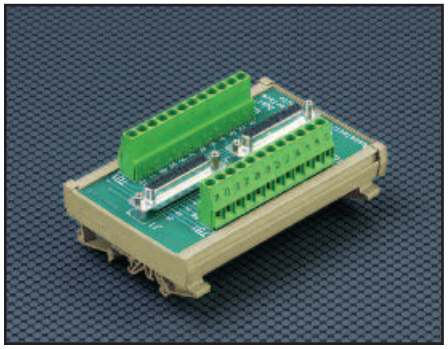

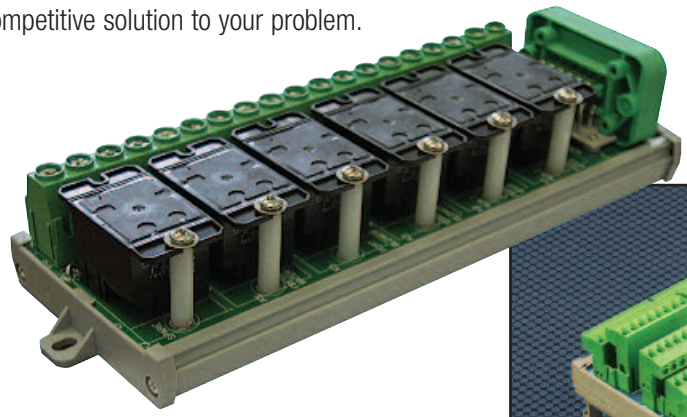

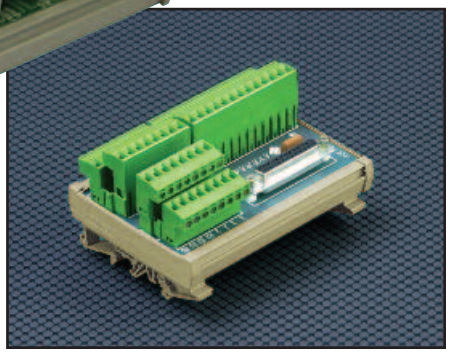



DATA SUBJECT TO CHANGE WITHOUT NOTICE

# CONNECTOR TO TERMINAL BLOCK MODULES

## INTERFACES CONNECTOR-TO-WIRE
## Ribbon Cable Module
## 35 or 32 mm DIN Rail

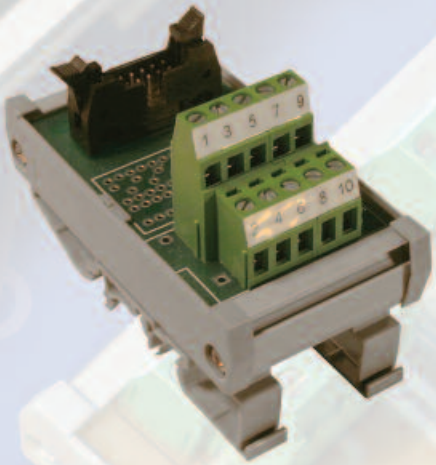

Compact Ribbon Connector Modules provide an interface between multi-wire flat cables outfitted with IDC connectors and discrete wires. Up to 64 conductors can be terminated saving time and eliminating wiring mistakes.No special wiring or tools are required. Ribbon Cable Interface Modules are typically used in communications, data processing, process control and other industrial applications. FBK Ribbon Cable Modules are supplied with short strain relief ejector latches (long ejector latches are available), screw-cage clamp terminal blocks and component solder pads for easy insertion of circuit building components. All terminal blocks are individually marked to correspond to the numbers on the header pins.

- Screw-Cage Clamp Connections
- Spring Clamp Connections Available
- Up to 64 Poles
- 4 to 5 Component Solder Pads Per Line
- .9mm (.035 in.) Diameter Component Mounting Holes
- DIN Rail Mount and Panel Mount Available

## INTERFACES CONNECTOR-TO-WIRE
## Subminiature D Module
## 35 or 32 mm DIN Rail

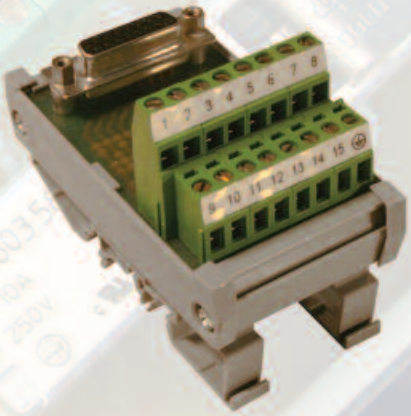

Compact Subminiature D (Sub D) Modules provide quick and reliable interfaces between high density connectors (back shells) with up to 50 poles and discrete wires. Connector-to-Wire Interface modules save time and eliminate wiring mistakes. No special tools are required. Sub D Interface modules are typically used in communications, data processing, process control and other industrial applications. Keyed by design, Sub D Modules are equipped with male or female connectors, screw-cage clamp terminal blocks, and component solder pads for easy insertion of circuit building components. All terminal blocks are individually marked to correspond to the numbers on the connector pins or sockets.

- Screw-Cage Clamp Connections
- Spring Clamp Connections Available
- 4 to 5 Component Solder Pads Per Line
- .9mm (.035 in.) Diameter Component Mounting Holes
- DIN Rail Mount, Panel Mount Available
- SD-F50 and SD-M50 are double-sided boards and do not have component solder pads.



DATA SUBJECT TO CHANGE WITHOUT NOTICE

## INTERFACES CONNECTOR-TO-WIRE
### Ribbon Cable Module
### 35 or 32mm DIN Rail Mount
### FBK

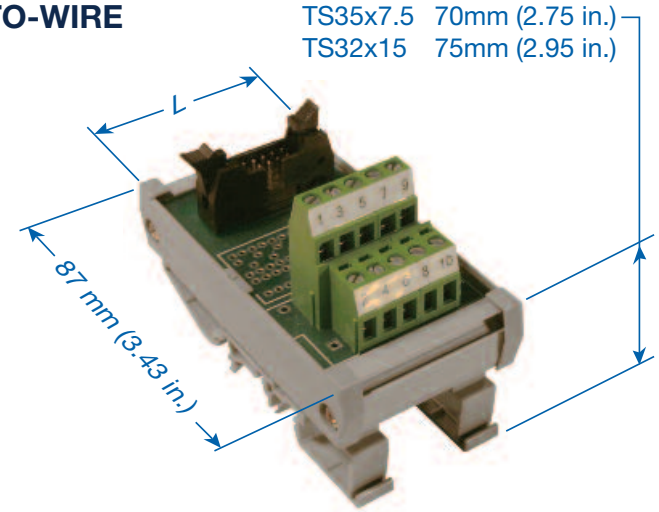


**Technical Information**

Current .....3 A
Voltage .....250V AC
Wire Range .....0.5-4 mm² / 22-12 AWG
Torque .....0.5-4 Nm / 4 lbs-in.
Stripping Length ...8 mm

### SCREW CLAMP

| Part Number | Type | No. of Poles | Module Length (L) in mm(in.) | Std. Pk. |
|---|---|---|---|---|
| 5720.2 | FBK10 | 10 | 46 (1.81) | 1 |
| 5721.2 | FBK14 | 14 | 46 (1.81) | 1 |
| 5722.2 | FBK16 | 16 | 68 (2.68) | 1 |
| 5723.2 | FBK20 | 20 | 68 (2.68) | 1 |
| 5724.2 | FBK26 | 26 | 80 (3.15) | 1 |
| 5725.2 | FBK34 | 34 | 93 (3.66) | 1 |
| 5726.2 | FBK40 | 40 | 114 (4.49) | 1 |
| 5727.2 | FBK50 | 50 | 139 (5.47) | 1 |
| 5728.2 | FBK60 | 60 | 180 (7.09) | 1 |
| 5729.2 | FBK64 | 64 | 180 (7.09) | 1 |

### SPRING CLAMP

| Part Number | Type | No. of Poles | Module Length (L) in mm(in.) | Std. Pk. |
|---|---|---|---|---|
| 5720.2/S | FBK10 | 10 | 46 (1.81) | 1 |
| 5721.2/S | FBK14 | 14 | 46 (1.81) | 1 |
| 5722.2/S | FBK16 | 16 | 68 (2.68) | 1 |
| 5723.2/S | FBK20 | 20 | 68 (2.68) | 1 |
| 5724.2/S | FBK26 | 26 | 80 (3.15) | 1 |
| 5725.2/S | FBK34 | 34 | 93 (3.66) | 1 |
| 5726.2/S | FBK40 | 40 | 114 (4.49) | 1 |
| 5727.2/S | FBK50 | 50 | 139 (5.47) | 1 |
| 5728.2/S | FBK60 | 60 | 180 (7.09) | 1 |
| 5729.2/S | FBK64 | 64 | 180 (7.09) | 1 |

PTH holes for convenient component insertion and easy soldering.

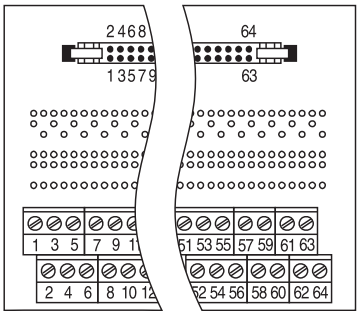


Female Connector SD-F37
37 Pin Socket Female Connector
Shown with component counting holes

Other models available; please contact Altech.

| Suffix | Description |
|---|---|
| none | Screw Terminal; DIN Rail Mount |
| /S | Spring Terminal; DIN Rail Mount |
| /P | Screw Terminal; Panel Mount |
| /L | Screw Terminal; Long Latch Connector; DIN Rail Mount |
| /SL | Spring Terminal; Long Latch Connector; DIN Rail Mount |
| /SP | Spring Terminal; Panel Mount |

Example: Part Number 5727.2/L for Long Latch model.



DATA SUBJECT TO CHANGE WITHOUT NOTICE

## INTERFACES CONNECTOR-TO-WIRE
### Subminiature SD **Male** Module
### 35 or 32 mm DIN Rail Mount

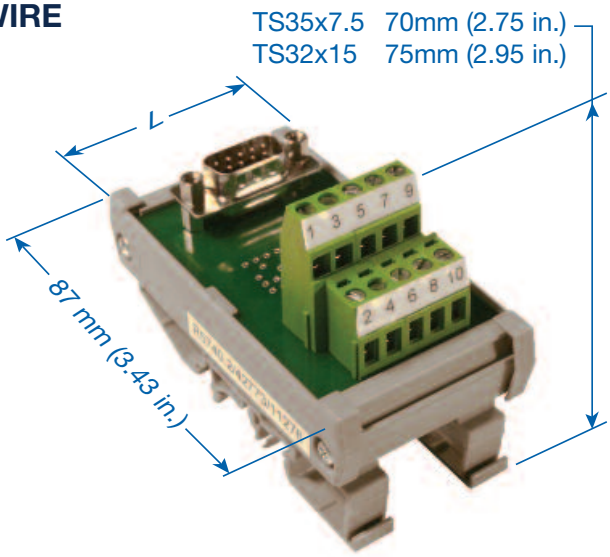


**Technical Information**

Current .....4 A
Voltage .....250V AC
Wire Range .....0.5-4 mm² / 22-12 AWG
Torque .....0.5-4 Nm / 4 lbs-in.
Stripping Length ...8 mm

### SCREW CLAMP

| Part Number | Type | No. of Poles | Module Length (L) in mm(in.) | Std. Pk. |
|---|---|---|---|---|
| 5740.2 | SD-M9 | 9 | 45 (1.77) | 1 |
| 5741.2 | SD-M15 | 15 | 53 (2.09) | 1 |
| 5741.3* | HDSD-M15 | 15 | 53 (2.09) | 1 |
| 5742.2 | SD-M25 | 25 | 80 (3.15) | 1 |
| 5743.2 | SD-M37 | 37 | 113 (4.45) | 1 |
| 5744.2[a,b] | SD-M50 | 50 | 136 (5.35) | 1 |

### SPRING CLAMP

| Part Number | Type | No. of Poles | Module Length (L) in mm(in.) | Std. Pk. |
|---|---|---|---|---|
| 5740.2/S | SD-M9 | 9 | 45 (1.77) | 1 |
| 5741.2/S | SD-M15 | 15 | 53 (2.09) | 1 |
| 5741.3/S* | HDSD-M15 | 15 | 53 (2.09) | 1 |
| 5742.2/S | SD-M25 | 25 | 80 (3.15) | 1 |
| 5743.2/S | SD-M37 | 37 | 113 (4.45) | 1 |
| 5744.2/S[a,b] | SD-M50 | 50 | 136 (5.35) | 1 |

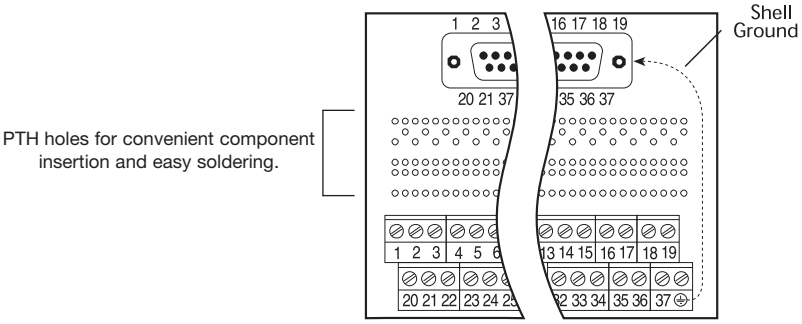


Female Connector SD-F37
37 Pin Socket Female Connector
Shown with component counting holes
(pads are on solder side)

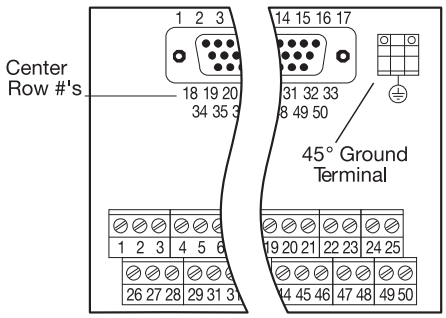


Female Connector SD-F50
50 Pin Socket Female Connector
Shown with no component solder pads

Other models available; please contact Altech.

| Suffix | Description |
|---|---|
| none | Screw Terminal; DIN Rail Mount |
| /S | Spring Terminal; DIN Rail Mount |
| /P | Screw Terminal; Panel Mount |
| /L | Screw Terminal; Long Latch Connector; DIN Rail Mount |
| /SL | Spring Terminal; Long Latch Connector; DIN Rail Mount |
| /SP | Spring Terminal; Panel Mount |

Example: Part Number 5727.2/L for Long Latch model.

* High density version.
[a] SD-M50 is only available with a 1.5A current rating.
[b] SD-F50 and SD-M50 are double-sided boards and do not have component solder pads.




DATA SUBJECT TO CHANGE WITHOUT NOTICE

## INTERFACES CONNECTOR-TO-WIRE
### Subminiature SD **Female** Module
### 35 or 32 mm DIN Rail Mount

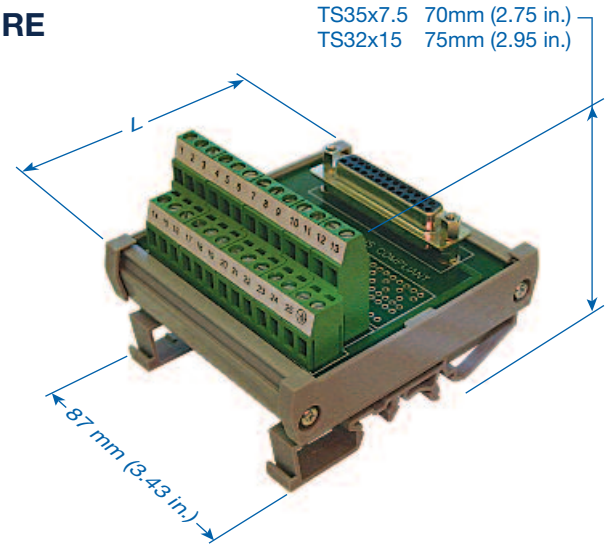


**Technical Information**

Current .....4 A
Voltage .....250V AC
Wire Range .....0.5-4 mm$^2$ / 22-12 AWG
Torque .....0.5-4 Nm / 4 lbs-in.
Stripping Length ...8 mm

### SCREW CLAMP

| Part Number | Type | No. of Poles | Module Length (L) in mm(in.) | Std. Pk. |
|---|---|---|---|---|
| 5745.2 | SD-F9 | 9 | 45 (1.77) | 1 |
| 5746.2 | SD-F15 | 15 | 49 (1.93) | 1 |
| 5746.3* | HDSD-F15 | 15 | 49 (1.93) | 1 |
| 5747.2 | SD-F25 | 25 | 80 (3.15) | 1 |
| 5748.2 | SD-F37 | 37 | 113 (4.45) | 1 |
| 5749.2[a,b] | SD-F50 | 50 | 136 (5.35) | 1 |

### SPRING CLAMP

| Part Number | Type | No. of Poles | Module Length (L) in mm(in.) | Std. Pk. |
|---|---|---|---|---|
| 5745.2/S | SD-F9 | 9 | 45 (1.77) | 1 |
| 5746.2/S | SD-F15 | 15 | 49 (1.93) | 1 |
| 5746.3/S* | HDSD-F15 | 15 | 49 (1.93) | 1 |
| 5747.2/S | SD-F25 | 25 | 80 (3.15) | 1 |
| 5748.2/S | SD-F37 | 37 | 113 (4.45) | 1 |
| 5749.2/S[a,b] | SD-F50 | 50 | 136 (5.35) | 1 |

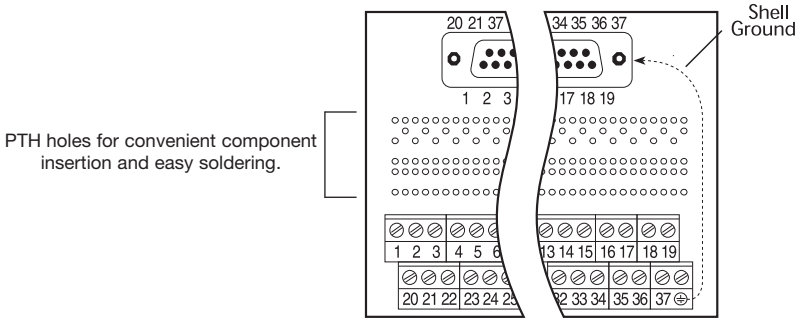


Female Connector SD-F37
37 Pin Socket Female Connector
Shown with component counting holes
(pads are on solder side)

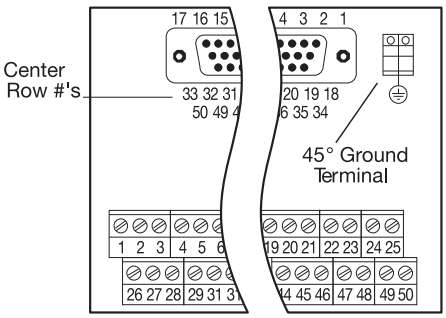


Female Connector SD-F50
50 Pin Socket Female Connector
Shown with no component solder pads

Other models available; please contact Altech.

| Suffix | Description |
|---|---|
| none | Screw Terminal; DIN Rail Mount |
| /S | Spring Terminal; DIN Rail Mount |
| /P | Screw Terminal; Panel Mount |
| /L | Screw Terminal; Long Latch Connector; DIN Rail Mount |
| /SL | Spring Terminal; Long Latch Connector; DIN Rail Mount |
| /SP | Spring Terminal; Panel Mount |

Example: Part Number 5727.2/L for Long Latch model.

* High density version.
[a] SD-M50 is only available with a 1.5A current rating.
[b] SD-F50 and SD-M50 are double-sided boards and do not have component solder pads.



DATA SUBJECT TO CHANGE WITHOUT NOTICE

# DIODE MODULES & COMPONENT CARRIERS

## INTERFACES
## DM Diode Module
## 35 or 32mm DIN Rail Mount

Wire individually labeled diodes into existing circuits for freewheeling, DC inductive kick suppression (commutating), reverse DC polarity protection, etc. Use bussed diodes for distribution of logic Vcc or ground, or gather and decouple electrical signals for lamp testing or collective fault messages. Use as commutating diodes across inductive loads such as DC relays, solenoid valves, actuator magnets, etc. to suppress voltage surges.

Standard modules include series connection diode circuits in 1 Amp and 3 Amp versions, and diode gates with bussed anodes or cathodes.

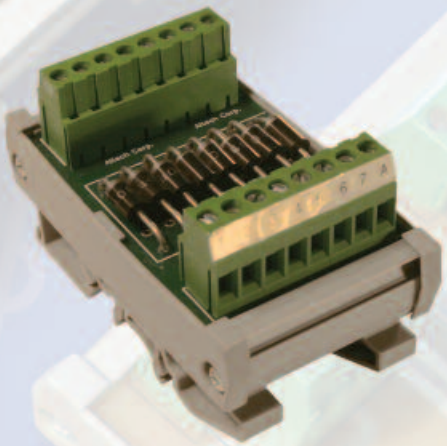

- Screw-Cage Clamp Connections
- Special Configurations Available
- DIN Rail Mount, Panel Mount Available

## INTERFACES
## Component Carriers
## 35 or 32mm DIN Rail

Use Component Carriers to modify and/or build circuits to meet special requirements. Type CCA requires removal of the single solder-side printed circuit board from the mounting track for soldering of components. Posts or through-leads can be installed for future field connections. Contact Altech for custom installation of solder posts. Type BSM allows field additions of diodes for decoupling, line crossovers for testing or multiplying tie-in terminals for a line. Pre-installed flat, fork-and-eyelet soldering posts allow component-side mechanical and solder connections with minimum disruption to wiring and mounted devices.

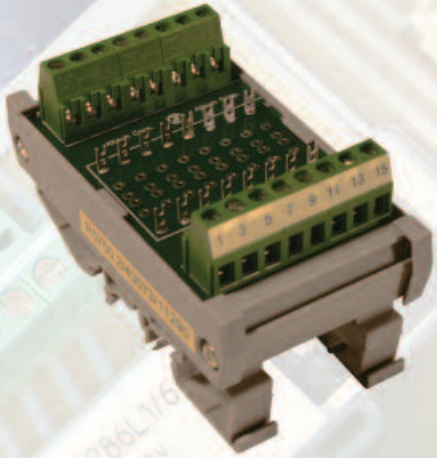

- Screw-Cage Clamp Connections
- Terminal Blocks are Numbered for Easy Wire Identification
- DIN Rail Mount, Panel Mount Available

## INTERFACES
## Dip Socket Carrier - 3 Amp
## 35 or 32mm DIN Rail Mount

Enhance design capabilities with Dual In-Line Package (DIP) Socket Carriers, the most versatile socket available. Use our DIPCs for reed-relays, power relays, photo-isolated Input/Output modules, in-line switches, thin film resistors and more. The Altech DIPC is rated 3 Amp and is available in 14, 16 and 20 pin socket configurations. Each DIPC module has several component solder pads for loading circuit-building components.

- Screw-Cage Clamp Connections
- 4 to 5 Component Solder Pads Per Line
- .9mm (.035 in.) Diameter Component Mounting Holes
- DIN Rail Mount, Panel Mount Available



DATA SUBJECT TO CHANGE WITHOUT NOTICE

## INTERFACES
### DM Diode Module
### 35 or 32 mm DIN Rail Mount

**Technical Information**

| Diode | Rated Current |
|---|---|
| 1N4007 or equivalent | 1A |
| 1N5408 or equivalent | 3A |
| P600M or equivalent | 6A |

Maximum Blocking Voltage - 1000V DC
Rated Bus Current: 10A
(12A at 30˚C (86˚F) Temperature Rise)
Wire Range .....0.5-4 mm²; 22-12 AWG
Voltage .....250V AC
Torque .....0.5-4 Nm / 4 lbs-in.
Stripping Length ...8 mm

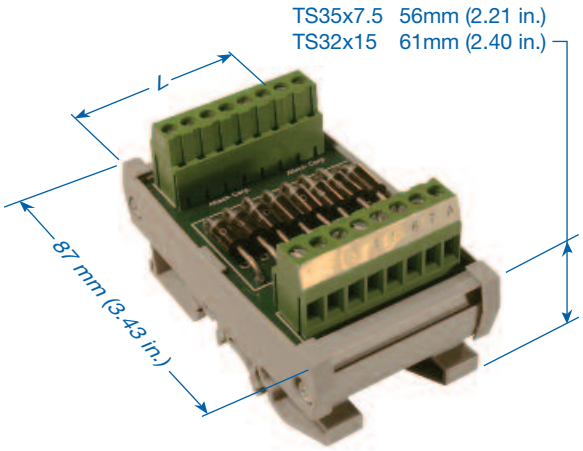


### SCREW CLAMP *

**1 AMP**

| Part Number | Type | Ordering Information | No. of Diodes | Diode | Module Length (L) in mm(in.) | Std. Pk. | Figure |
|---|---|---|---|---|---|---|---|
| 8971.2 | DM4-S | Series Connection, 1A diodes | 4 | 1N4007 | 24 (0.95) | 1 | A |
| 5702.2 | DM8-S | Series Connection, 1A diodes | 8 | 1N4007 | 44 (1.73) | 1 | A |
| 5703.2 | DM12-S | Series Connection, 1A diodes | 12 | 1N4007 | 64 (2.52) | 1 | A |
| 8973.2 | DM16-S | Series Connection, 1A diodes | 16 | 1N4007 | 92 (3.62) | 1 | A |
| 8974.2 | DM20-S | Series Connection, 1A diodes | 20 | 1N4007 | 112 (4.41) | 1 | A |
| 8975.2 | DM24-S | Series Connection, 1A diodes | 24 | 1N4007 | 132 (5.20) | 1 | A |
| 8842.2 | DM6-A-S | Bussed Anodes, 1A diodes | 6 | 1N4007 | 30 (1.18) | 1 | B |
| 5704.2 | DM14-A-S | Bussed Anodes, 1A diodes | 14 | 1N4007 | 50 (1.97) | 1 | B |
| 5705.2 | DM22-A-S | Bussed Anodes, 1A diodes | 22 | 1N4007 | 70 (2.75) | 1 | B |
| 8850.2 | DM6-K-S | Bussed Cathodes, 1A diodes | 6 | 1N4007 | 30 (1.18) | 1 | C |
| 5706.2 | DM14-K-S | Bussed Cathodes, 1A diodes | 14 | 1N4007 | 50 (1.97) | 1 | C |
| 5707.2 | DM22-K-S | Bussed Cathodes, 1A diodes | 22 | 1N4007 | 70 (2.75) | 1 | C |

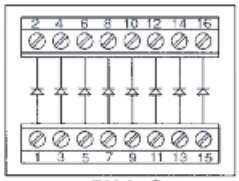

DM 8 - S

Figure A

**3 AMP**

| Part Number | Type | Ordering Information | No. of Diodes | Diode | Module Length (L) in mm(in.) | Std. Pk. | Figure |
|---|---|---|---|---|---|---|---|
| 8971.3 | DM4-S3 | Series Connection, 3A diodes | 4 | 1N5408 | 24 (0.95) | 1 | A |
| 5702.3 | DM8-S3 | Series Connection, 3A diodes | 8 | 1N5408 | 44 (1.73) | 1 | A |
| 5703.3 | DM12-S3 | Series Connection, 3A diodes | 12 | 1N5408 | 64 (2.52) | 1 | A |
| 8973.3 | DM16-S3 | Series Connection, 3A diodes | 16 | 1N5408 | 92 (3.62) | 1 | A |
| 8974.3 | DM20-S3 | Series Connection, 3A diodes | 20 | 1N5408 | 112 (4.41) | 1 | A |
| 8975.3 | DM24-S3 | Series Connection, 3A diodes | 24 | 1N5408 | 132 (5.20) | 1 | A |
| 8842.3 | DM6-A-S3 | Bussed Anodes, 3A diodes | 6 | 1N5408 | 30 (1.18) | 1 | B |
| 5704.3 | DM14-A-S3 | Bussed Anodes, 3A diodes | 14 | 1N5408 | 50 (1.97) | 1 | B |
| 5705.3 | DM22-A-S3 | Bussed Anodes, 3A diodes | 22 | 1N5408 | 70 (2.75) | 1 | B |
| 8850.3 | DM6-K-S3 | Bussed Cathodes, 3A diodes | 6 | 1N5408 | 30 (1.18) | 1 | C |
| 5706.3 | DM14-K-S3 | Bussed Cathodes, 3A diodes | 14 | 1N5408 | 50 (1.97) | 1 | C |
| 5707.3 | DM22-K-S3 | Bussed Cathodes, 3A diodes | 22 | 1N5408 | 70 (2.75) | 1 | C |

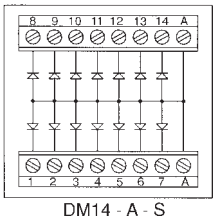

DM14 - A - S

Figure B

**6 AMP**

| Part Number | Type | Ordering Information | No. of Diodes | Diode | Module Length (L) in mm(in.) | Std. Pk. | Figure |
|---|---|---|---|---|---|---|---|
| 8971.4 | DM4-S6 | Series Connection, 6A diodes | 4 | P600M | 24 (0.95) | 1 | A |
| 5702.4 | DM8-S6 | Series Connection, 6A diodes | 8 | P600M | 44 (1.73) | 1 | A |
| 5703.4 | DM12-S6 | Series Connection, 6A diodes | 12 | P600M | 64 (2.52) | 1 | A |
| 8973.4 | DM16-S6 | Series Connection, 6A diodes | 16 | P600M | 92 (3.62) | 1 | A |
| 8974.4 | DM20-S6 | Series Connection, 6A diodes | 20 | P600M | 112 (4.41) | 1 | A |
| 8975.4 | DM24-S6 | Series Connection, 6A diodes | 24 | P600M | 132 (5.20) | 1 | A |
| 8842.4 | DM6-A-S6 | Bussed Anodes, 6A diodes | 6 | P600M | 30 (1.18) | 1 | B |
| 5704.4 | DM14-A-S6 | Bussed Anodes, 6A diodes | 14 | P600M | 50 (1.97) | 1 | B |
| 5705.4 | DM22-A-S6 | Bussed Anodes, 6A diodes | 22 | P600M | 70 (2.75) | 1 | B |
| 8850.4 | DM6-K-S6 | Bussed Cathodes, 6A diodes | 6 | P600M | 30 (1.18) | 1 | C |
| 5706.4 | DM14-K-S6 | Bussed Cathodes, 6A diodes | 14 | P600M | 50 (1.97) | 1 | C |
| 5707.4 | DM22-K-S6 | Bussed Cathodes, 6A diodes | 22 | P600M | 70 (2.75) | 1 | C |

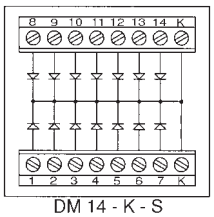

DM 14 - K - S

Figure C

* Spring Terminal is available; add suffix S to end of part number. Example: Part Number 8971.2/S for Spring Terminal.



DATA SUBJECT TO CHANGE WITHOUT NOTICE

## INTERFACES
### CCA Component Carrier 35 or 32 mm DIN Rail Mount with PTH holes

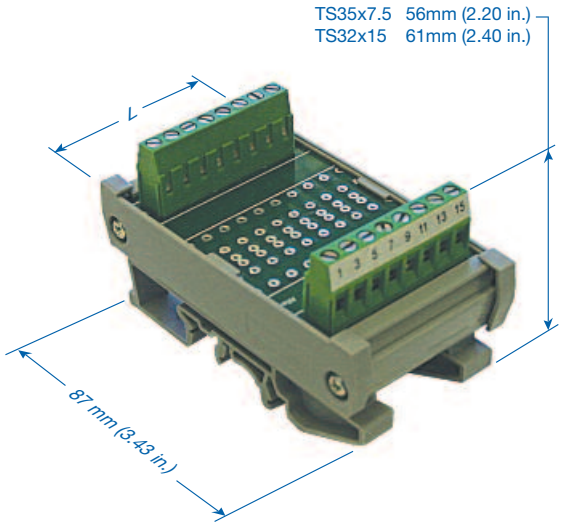


**Technical Information**

Current .....6 A (12 A Bus)
Terminal.....15 A
Voltage .....250V AC
Wire Range .....0.5-4 mm$^2$ / 22-12 AWG
Torque .....0.5-4 Nm / 4 lbs-in.
Stripping Length ...8 mm

### SCREW CLAMP

| Part Number | Type | No. of Poles | Module Length (L) in mm(in.) | Std. Pk. |
|---|---|---|---|---|
| 8835.2 | CCA4 | 4 | 24 (.87) | 1 |
| 8836.2 | CCA8 | 8 | 44 (1.65) | 1 |
| 8837.2 | CCA12 | 12 | 64 (2.44) | 1 |
| 8838.2 | CCA16 | 16 | 84 (3.23) | 1 |
| 8839.2 | CCA20 | 20 | 104 (4.02) | 1 |
| 8840.2 | CCA24 | 24 | 124 (4.80) | 1 |

### SPRING CLAMP

| Part Number | Type | No. of Poles | Module Length (L) in mm(in.) | Std. Pk. |
|---|---|---|---|---|
| 8835.2/S | CCA4 | 4 | 24 (.87) | 1 |
| 8836.2/S | CCA8 | 8 | 44 (1.65) | 1 |
| 8837.2/S | CCA12 | 12 | 64 (2.44) | 1 |
| 8838.2/S | CCA16 | 16 | 84 (3.23) | 1 |
| 8839.2/S | CCA20 | 20 | 104 (4.02) | 1 |
| 8840.2/S | CCA24 | 24 | 124 (4.80) | 1 |

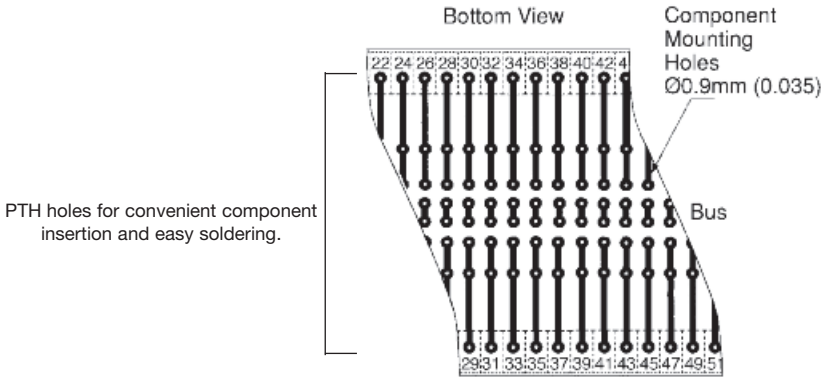


CCA Type




DATA SUBJECT TO CHANGE WITHOUT NOTICE

## INTERFACES
### BSM Component Carrier 35 or 32 mm DIN Rail Mount with solder posts

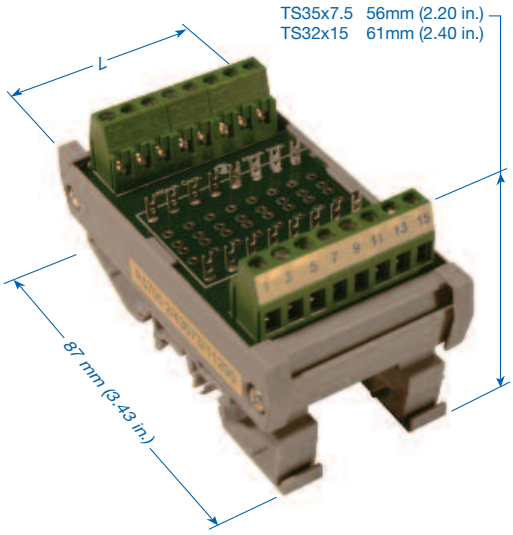


**Technical Information**

Current .....6 A (12 A Bus)
Terminal.....15 A
Voltage .....250V AC
Wire Range .....0.5-4 mm$^2$ / 22-14 AWG
Torque .....0.5-4 Nm / 4 lbs-in.
Stripping Length ...8 mm

### SCREW CLAMP

| Part Number | Type | No. of Poles | Module Length (L) in mm(in.) | Std. Pk. |
|---|---|---|---|---|
| 5700.2 | BSM8-S | 16 | 47 (1.85) | 1 |
| 5701.2 | BSM12-S | 24 | 69 (2.72) | 1 |

### SPRING CLAMP

| Part Number | Type | No. of Poles | Module Length (L) in mm(in.) | Std. Pk. |
|---|---|---|---|---|
| 5700.2/S | BSM8-S | 16 | 47 (1.85) | 1 |
| 5701.2/S | BSM12-S | 24 | 69 (2.72) | 1 |

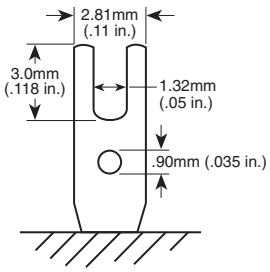


Solder Post

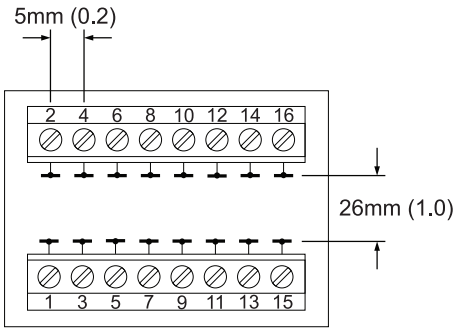


BSM Type




DATA SUBJECT TO CHANGE WITHOUT NOTICE

## INTERFACES
### Dip Socket Carrier - 3 Amp
### 35 or 32mm DIN Rail Mount

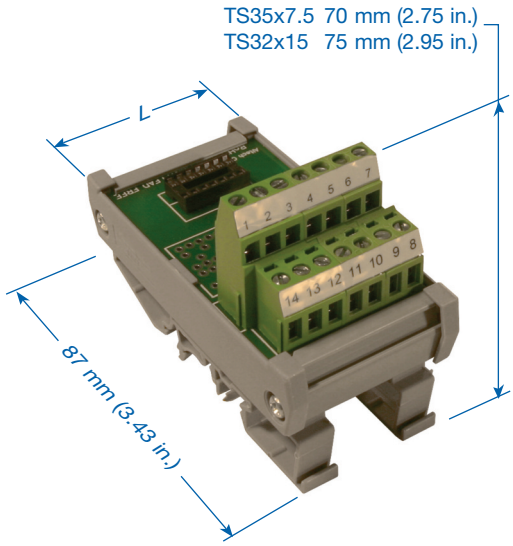


Typical Applications:
14 Pin
Magnecraft® Classes 107, 171, 172;
S-D® Series MRR-D; Hamlin® 700;
Dale® TDP14 Resistors; etc.
16 Pin
Most P&B® including T85 Hi Sens and
I/O Modules IA, OA, OD16;
Midtex® 190 Power;
Augat® Alcoswitch® GD, AD Series, etc.
20 Pin
C&K® BD series switches;
Grayhill® 79 coded switches;
AMP® 7600 shunts; etc.

**Technical Information**

Current .....3 A[a]
Voltage .....250V AC
Wire Range .....0.5-4 mm$^2$ / 22-12 AWG
Torque .....0.5-4 Nm / 4 lbs-in.
Stripping Length ...8 mm

### SCREW CLAMP

| Part Number | Type | No. of Poles | Module Length (L) in mm(in.) | Std. Pk. |
|---|---|---|---|---|
| 8937.2 | DIPC14 | 14 | 45 (1.77) | 1 |
| 8938.2 | DIPC16 | 16 | 68 (2.68) | 1 |
| 8939.2 | DIPC20 | 20 | 68 (2.68) | 1 |

### SPRING CLAMP

| Part Number | Type | No. of Poles | Module Length (L) in mm(in.) | Std. Pk. |
|---|---|---|---|---|
| 8937.2/S | DIPC14 | 14 | 45 (1.77) | 1 |
| 8938.2/S | DIPC16 | 16 | 56 (2.20) | 1 |
| 8939.2/S | DIPC20 | 20 | 56 (2.20) | 1 |

PTH holes for convenient component insertion and easy soldering.

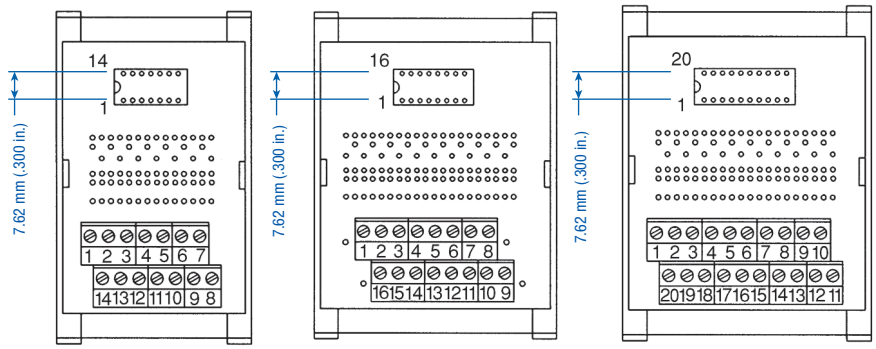


[a] Current Ratings
Printed Circuit Traces: 3.5A
Terminal Blocks: 15A
Dip Socket: 3A



DATA SUBJECT TO CHANGE WITHOUT NOTICE

## RJ45 INTERFACES CONNECTOR-TO-WIRE
### 35 or 32mm DIN Rail Mount

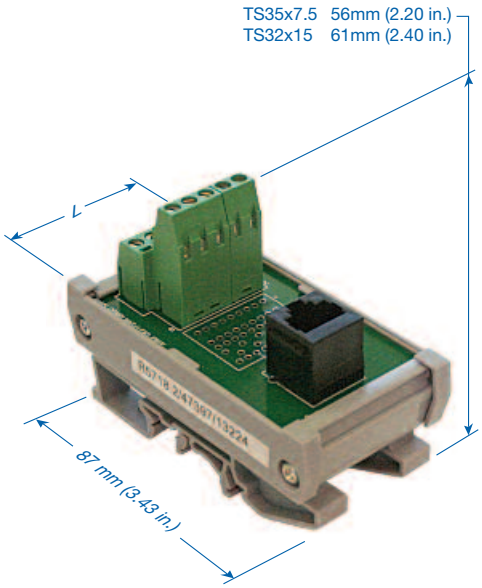


**Technical Information**

Current .....1.5 A
Voltage .....150V AC
Wire Range .....0.5-4 mm$^2$ / 20-12 AWG
Torque .....0.5-4 Nm / 4 lbs-in.
Stripping Length ...8 mm

**SCREW CLAMP - VERTICAL - Top Entry**

| Part Number | Type | No. of Poles | Module Length (L) in mm(in.) | Std. Pk. |
|---|---|---|---|---|
| 5718.2 | RJ45 | 8 | 36 (1.42) | 1 |
| 5719.2 | RJ45 Shielded | 8 + 2 shield | 36 (1.42) | 1 |

**SCREW CLAMP - HORIZONTAL - Side Entry**

| | | | | |
|---|---|---|---|---|
| 5718.3 | RJ45 | 8 | 36 (1.42) | 1 |
| 5719.3 | RJ45 Shielded | 8 + 2 shield | 36 (1.42) | 1 |

**SPRING CLAMP - VERTICAL - Top Entry**

| Part Number | Type | No. of Poles | Module Length (L) in mm(in.) | Std. Pk. |
|---|---|---|---|---|
| 5718.2/S | RJ45 | 8 | 36 (1.42) | 1 |
| 5719.2/S | RJ45 Shielded | 8 + 2 shield | 36 (1.42) | 1 |

**SPRING CLAMP - HORIZONTAL - Side Entry**

| | | | | |
|---|---|---|---|---|
| 5718.3/S | RJ45 | 8 | 36 (1.42) | 1 |
| 5719.3/S | RJ45 Shielded | 8 + 2 shield | 36 (1.42) | 1 |

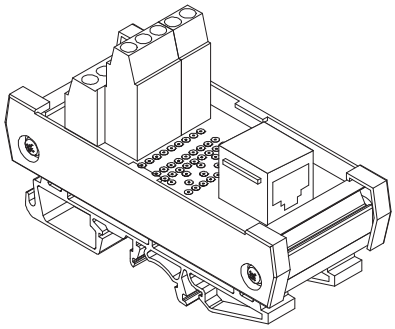

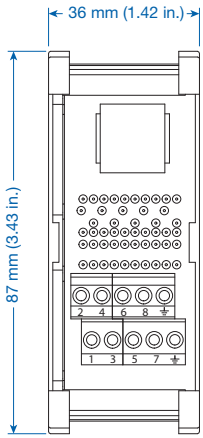


With Horizontal - Side Entry
RJ45 Connector

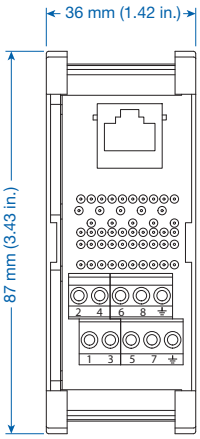


With Vertical - Top Entry
RJ45 Connector




DATA SUBJECT TO CHANGE WITHOUT NOTICE

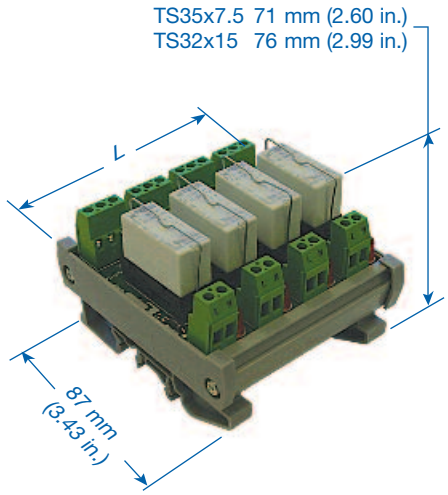


## RC1 / RM1 SPDT (Single Pole Double Throw)

Isolated channels (no bus) allow control of each relay by a different logic system, if necessary. Mix sourcing (positive switching, Vcc on/off) and sinking (negative switching, ground on/off) on a single multi-relay module. Provide spare relay channels for future needs without committing to a specific logic power supply, and without committing coil-drive power for more than one relay at a time.

Altech Relay Modules provide high density packaging of miniature general purpose relays with Single Pole Double Throw (Form C) and Double Pole Double Throw (2 Form C) contact configurations and low current AC and DC coils. Load your own relays in our RC Relay Carrier, or order the RM Relay Module complete with relays.

Call us with your custom module requirements!

- Screw-Cage Clamp Connections
- Spring Clamp Terminals
- LED Coil Voltage Indicator
- Reverse DC Polarity LED Protection
- Surge Suppression with DC Coil
- DIN Rail Mount, Panel Mount Available

### Technical Information

Current .....12 A
Voltage (max) .....250V AC / 24V DC
Wire Range .....0.5-4 $mm^2$ / 30-14 AWG
Torque .....0.5-4 Nm / 4 lbs-in.
Stripping Length ...8 mm

## SPDT

| | | Screw terminal | | Spring terminal | | |
|---|---|---|---|---|---|---|
| Number of Channels | Coil Voltage | Carrier Only Part Number | Module with Relays Part Number | Carrier Only Part Number | Module with Relays Part Number | Module Length (L) in mm (in) |
| 1 Channel | 12V DC | 8929.5 | 8929.2 | 8929.5/S | 8929.2/S | 21 (0.83) |
| | 24V DC | 8933.5 | 8933.2 | 8933.5/S | 8933.2/S | 21 (0.83) |
| | 110V AC | 8935.5 | 8935.2 | 8935.5/S | 8935.2/S | 21 (0.83) |
| | 220V AC | 8940.5 | 8940.2 | 8940.5/S | 8940.2/S | 21 (0.83) |
| 2 Channel | 12V DC | 8929.6 | 8929.3 | 8929.6/S | 8929.3/S | 40 (1.57) |
| | 24V DC | 8933.6 | 8933.3 | 8933.6/S | 8933.3/S | 40 (1.57) |
| | 110V AC | 8935.6 | 8935.3 | 8935.6/S | 8935.3/S | 40 (1.57) |
| | 220V AC | 8940.6 | 8940.3 | 8940.6/S | 8940.3/S | 40 (1.57) |
| 4 Channel | 12V DC | 8931.5 | 8931.2 | 8931.5/S | 8931.2/S | 79 (3.11) |
| | 24V DC | 8941.5 | 8941.2 | 8941.5/S | 8941.2/S | 79 (3.11) |
| | 110V AC | 8942.5 | 8942.2 | 8942.5/S | 8942.2/S | 79 (3.11) |
| | 220V AC | 8943.5 | 8943.2 | 8943.5/S | 8943.2/S | 79 (3.11) |
| 8 Channel | 12V DC | 8931.6 | 8931.3 | 8931.6/S | 8931.3/S | 157 (6.18) |
| | 24V DC | 8941.6 | 8941.3 | 8941.6/S | 8941.3/S | 157 (6.18) |
| | 110V AC | 8942.6 | 8942.3 | 8942.6/S | 8942.3/S | 157 (6.18) |
| | 220V AC | 8943.6 | 8943.3 | 8943.6/S | 8943.3/S | 157 (6.18) |
| 16 Channel | 12V DC | 8932.5 | 8932.2 | 8932.5/S | 8932.2/S | 311 (12.24) |
| | 24V DC | 8944.5 | 8944.2 | 8944.5/S | 8944.2/S | 311 (12.24) |
| | 110V AC | 8946.5 | 8946.2 | 8946.5/S | 8946.2/S | 311 (12.24) |
| | 220V AC | 8948.5 | 8948.2 | 8948.5/S | 8948.2/S | 311 (12.24) |




DATA SUBJECT TO CHANGE WITHOUT NOTICE

### CONTACT SPECIFICATIONS*

SPDT Composite Rating .....12A
Relay Socket.....12A
Terminal Block .....15A
PCB Trace for Contact Circuit
at 30°C (86°F) temperature rise NC.....12A
Common and NO .....16A
PCB Trace for Coil Circuit
at 30°C (86°F) temperature rise .....6A
Relay Contact Material.....AgNi
Rated load (capacity) .....12A at 250VAC / 24VDC
Min. switching voltage .....5 V
Min. switching current .....5mA
Min. breaking capacity.....0.3W

### COIL SPECIFICATIONS*

Ambient Temperature..... -40°C-+85°C (-40°F-+185°F)

| Coil Voltage AC / DC | Coil operating range V AC / DC | | Coil Current in mA | Coil resistance at 20°C in Ω | Acceptable resistance |
|---|---|---|---|---|---|
| | Min. | Max. | | | |
| 12 VDC | 8.4 | 30.6 | 40 | 360 | ± 10 % |
| 24 VDC | 16.8 | 61.2 | 20 | 1440 | ± 10 % |
| 110 VAC | 88 | 132 | 4.4 | 8900 | ± 10 % |
| 220 VAC | 176 | 264 | 2.2 | 35500 | ± 10 % |

### RELAY PINOUT*

SPDT

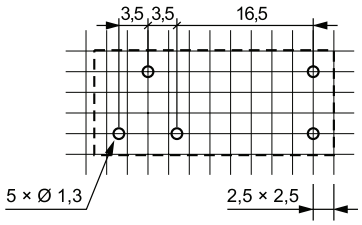


### CONTACT CIRCUITS*

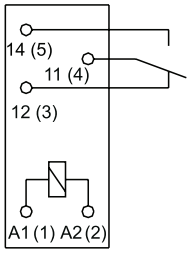


SPDT

### COIL CIRCUITS

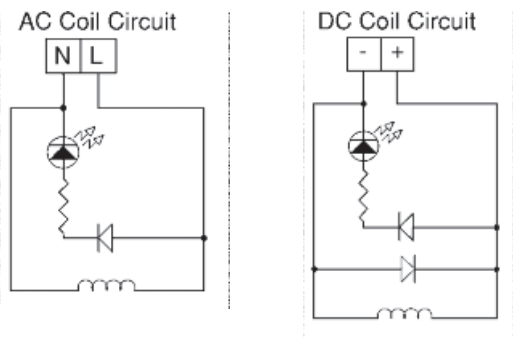


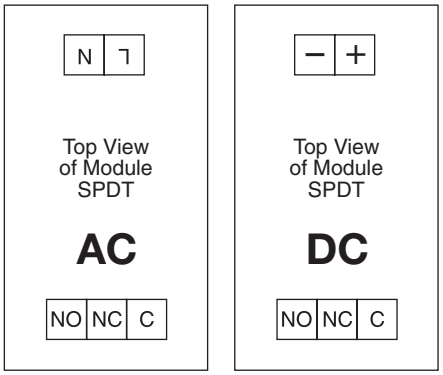


SPDT

* For more information please see page 76 (Relay RM87)




DATA SUBJECT TO CHANGE WITHOUT NOTICE

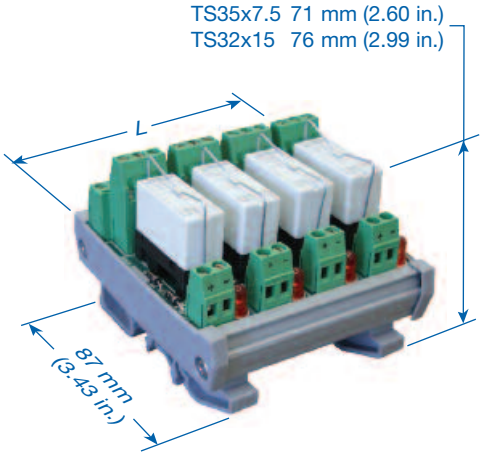


## RC2 / RM2 (Double Pole Double Throw)

Isolated channels (no bus) allow control of each relay by a different logic system, if necessary. Mix sourcing (positive switching, Vcc on/off) and sinking (negative switching, ground on/off) on a single multi-relay module. Provide spare relay channels for future needs without committing to a specific logic power supply, and without committing coil-drive power for more than one relay at a time.

Altech Relay Modules provide high density packaging of miniature general purpose relays with Single Pole Double Throw (Form C) and Double Pole Double Throw (2 Form C) contact configurations and low current AC and DC coils. Load your own relays in our RC Relay Carrier, or order the RM Relay Module complete with relays.

Call us with your custom module requirements!

- Screw-Cage Clamp Connections
- Spring Clamp Terminals
- LED Coil Voltage Indicator
- Reverse DC Polarity LED Protection
- Surge Suppression with DC Coil
- DIN Rail Mount, Panel Mount Available

### Technical Information

Current .....8 A
Voltage (max) .....250V AC / 24V DC
Wire Range .....0.5-4 $mm^2$ / 30-14 AWG
Torque .....0.5-4 Nm / 4 lbs-in.
Stripping Length ...8 mm

## DPDT

| Number of Channels | Coil Voltage | Screw terminal Carrier Only Part Number | Screw terminal Module with Relays Part Number | Spring terminal Carrier Only Part Number | Spring terminal Module with Relays Part Number | Module Length (L) in mm (in) |
|---|---|---|---|---|---|---|
| 1 Channel | 12V DC | 8945.5 | 8945.2 | 8945.5/S | 8945.2/S | 21 (0.83) |
| | 24V DC | 8951.5 | 8951.2 | 8951.5/S | 8951.2/S | 21 (0.83) |
| | 110V AC | 8953.5 | 8953.2 | 8953.5/S | 8953.2/S | 21 (0.83) |
| | 220V AC | 8954.5 | 8954.2 | 8954.5/S | 8954.2/S | 21 (0.83) |
| 2 Channel | 12V DC | 8949.6 | 8949.3 | 8949.6/S | 8949.3/S | 40 (1.57) |
| | 24V DC | 8951.6 | 8951.3 | 8951.6/S | 8951.3/S | 40 (1.57) |
| | 110V AC | 8953.6 | 8953.3 | 8953.6/S | 8953.3/S | 40 (1.57) |
| | 220V AC | 8954.6 | 8954.3 | 8954.6/S | 8954.3/S | 40 (1.57) |
| 4 Channel | 12V DC | 8955.5 | 8955.2 | 8955.5/S | 8955.2/S | 79 (3.11) |
| | 24V DC | 8956.5 | 8956.2 | 8956.5/S | 8956.2/S | 79 (3.11) |
| | 110V AC | 8957.5 | 8957.2 | 8957.5/S | 8957.2/S | 79 (3.11) |
| | 220V AC | 8959.5 | 8959.2 | 8959.5/S | 8959.2/S | 79 (3.11) |
| 8 Channel | 12V DC | 8955.6 | 8955.3 | 8955.6/S | 8955.3/S | 157 (6.18) |
| | 24V DC | 8956.6 | 8956.3 | 8956.6/S | 8956.3/S | 157 (6.18) |
| | 110V AC | 8957.6 | 8957.3 | 8957.6/S | 8957.3/S | 157 (6.18) |
| | 220V AC | 8959.6 | 8959.3 | 8959.6/S | 8959.3/S | 157 (6.18) |
| 16 Channel | 12V DC | 8963.5 | 8963.2 | 8963.5/S | 8963.2/S | 311 (12.24) |
| | 24V DC | 8972.5 | 8972.2 | 8972.5/S | 8972.2/S | 311 (12.24) |
| | 110V AC | 8995.5 | 8995.2 | 8995.5/S | 8995.2/S | 311 (12.24) |
| | 220V AC | 8999.5 | 8999.2 | 8999.5/S | 8999.2/S | 311 (12.24) |




DATA SUBJECT TO CHANGE WITHOUT NOTICE

### CONTACT SPECIFICATIONS*

DPDT Rating .....8A
Relay Socket.....8A
Terminal Block.....15A
PCB Trace for Contact Circuit
at 30°C (86°F) temperature rise NC.....10A
PCB Trace for Coil Circuit
at 30°C (86°F) temperature rise .....2A
Relay Contact Material.....AgNi
Rated load (capacity) .....8A at 250VAC / 24VDC
Min. switching voltage .....5 V
Min. switching current .....5mA
Min. breaking capacity.....0.3W

### COIL SPECIFICATIONS*

Ambient Temperature..... -40°C-+85°C (-40°F-+185°F)

| Coil Voltage AC / DC | Coil operating range V AC / DC | | Coil Current in mA | Coil resistance at 20°C in Ω | Acceptable resistance |
|---|---|---|---|---|---|
| | Min. | Max. | | | |
| 12 VDC | 8.4 | 30.6 | 40 | 360 | ± 10 % |
| 24 VDC | 16.8 | 61.2 | 20 | 1440 | ± 10 % |
| 110 VAC | 88 | 132 | 4.4 | 8900 | ± 10 % |
| 220 VAC | 176 | 264 | 2.2 | 35500 | ± 10 % |

### RELAY PINOUT*

SPDT

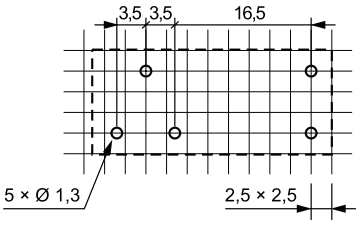


### CONTACT CIRCUITS*

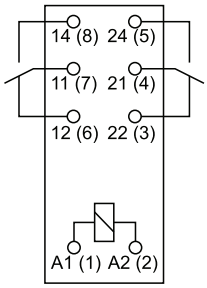


DPDT

### COIL CIRCUITS

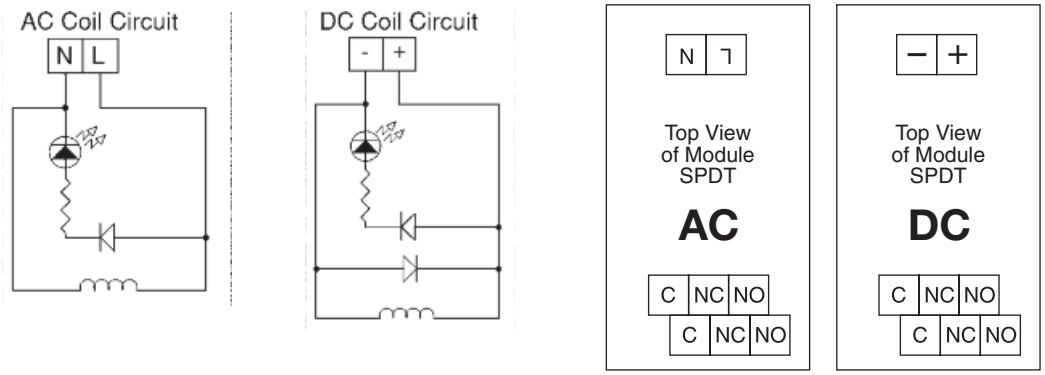


DPDT

* For more information please see page 76 (Relay RM84)




DATA SUBJECT TO CHANGE WITHOUT NOTICE

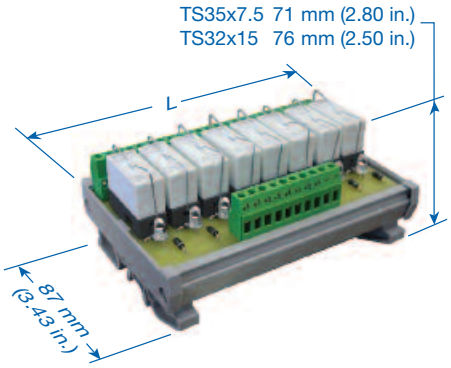


## RC1 / RM1 (Single Pole Double Throw)

Altech Bussed Relay Modules provide high density packaging of miniature general purpose relays with minimal hook-up wiring. Select from bussed DC Positive (DC Negative switching), bussed DC Negative (DC Positive switching), or bussed AC neutral.

Ideal for traditional mechanical relay input/output array between a single logic system and peripheral devices, or between logic systems in a network as well as their peripheral and field devices.

Load your own relays in our RCB Relay Carrier, or order the RMB Relay Module complete with 8 or 16 relays.

Call us with your custom module requirements!

- Screw-Cage Clamp Connections
- Spring Clamp Terminals
- LED Coil Voltage Indicator
- Reverse DC Polarity LED Protection
- Surge Suppression With DC Coil
- DIN Rail Mount, Panel Mount Available

### Technical Information

Current .....12 A
Voltage (max) .....250V AC / 24V DC
Wire Range .....0.5-4 $mm^2$ / 30-14 AWG
Torque .....0.5-4 Nm / 4 lbs-in.
Stripping Length ...8 mm

## SPDT

| Number of Channels | Coil Voltage | Screw terminal Carrier Only Part Number | Screw terminal Module with Relays Part Number | Spring terminal Carrier Only Part Number | Spring terminal Module with Relays Part Number | Module Length (L) in mm (in) |
|---|---|---|---|---|---|---|
| 8 Channel, Bussed DC+ | 12V DC ( E) | 8912.5 | 8912.2 | 8912.5/S | 8912.2/S | 125 (4.92) |
| | 24V DC (G) | 5494.5 | 5494.2 | 5494.5/S | 5494.2/S | 125 (4.92) |
| 8 Channel, Bussed DC- | 12V DC ( E) | 8912.6 | 8912.3 | 8912.6/S | 8912.3/S | 125 (4.92) |
| | 24V DC (G) | 5492.5 | 5492.2 | 5492.5/S | 5492.2/S | 125 (4.92) |
| 8 Channel, Bussed AC (N) | 110V AC (U) | 5502.5 | 5502.2 | 5502.5/S | 5502.2/S | 125 (4.92) |
| | 220V AC (X) | 8913.6 | 8913.3 | 8913.6/S | 8913.3/S | 125 (4.92) |
| 16 Channel, Bussed DC+ | 12V DC ( E) | 8914.5 | 8914.2 | 8914.5/S | 8914.2/S | 248 (9.76) |
| | 24V DC (G) | 5508.5 | 5508.2 | 5508.5/S | 5508.2/S | 248 (9.76) |
| 16 Channel, Bussed DC- | 12V DC ( E) | 8921.5 | 8921.2 | 8921.5/S | 8921.2/S | 248 (9.76) |
| | 24V DC (G) | 5506.5 | 5506.2 | 5506.5/S | 5506.2/S | 248 (9.76) |
| 16 Channel, Bussed AC(N) | 110V AC (U) | 5514.5 | 5514.2 | 5514.5/S | 5514.2/S | 248 (9.76) |
| | 220V AC (X) | 5514.6 | 5514.3 | 5514.6/S | 5514.3/S | 248 (9.76) |




DATA SUBJECT TO CHANGE WITHOUT NOTICE

### CONTACT SPECIFICATIONS*

SPDT Composite Rating .....12A
Relay Socket.....12A
Terminal Block .....15A
PCB Trace for Contact Circuit
at 30°C (86°F) temperature rise NC.....12A
PCB Trace for Coil Circuit
at 30°C (86°F) temperature rise .....4A
PCB Trace for Bus
at 30°C (86°F) temperature rise .....16A
Relay Contact Material.....AgNi
Rated load (capacity) .....12A at 250VAC / 24VDC
Min. switching voltage .....5 V
Min. switching current .....5mA
Min. breaking capacity.....0.3W

### RELAY PINOUT*

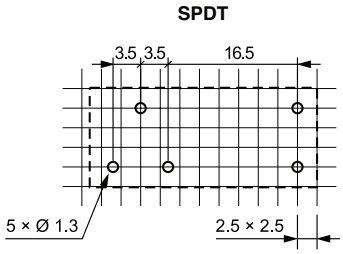


### COIL SPECIFICATIONS*

Ambient Temperature..... -40°C-+85°C (-40°F-+185°F)

| Coil Voltage AC / DC | Coil operating range V AC / DC | | Coil Current in mA | Coil resistance at 20°C in Ω | Acceptable resistance |
|---|---|---|---|---|---|
| | Min. | Max. | | | |
| 12 VDC | 8.4 | 30.6 | 40 | 360 | ± 10 % |
| 24 VDC | 16.8 | 61.2 | 20 | 1440 | ± 10 % |
| 110 VAC | 88 | 132 | 4.4 | 8900 | ± 10 % |
| 220 VAC | 176 | 264 | 2.2 | 35500 | ± 10 % |

### CONTACT CIRCUITS*

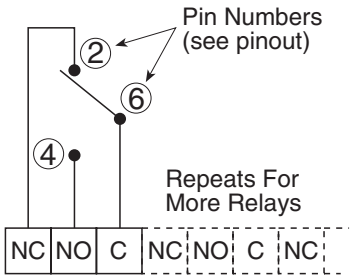


### COIL CIRCUITS

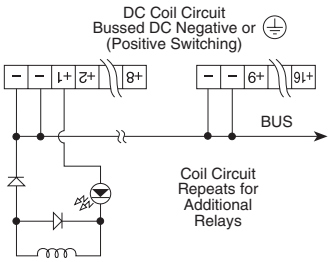


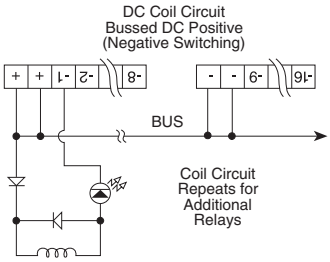


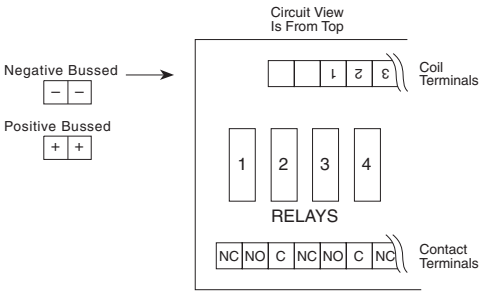


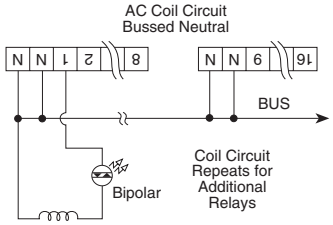


* For more information please see page 76 (Relay RM87)



DATA SUBJECT TO CHANGE WITHOUT NOTICE

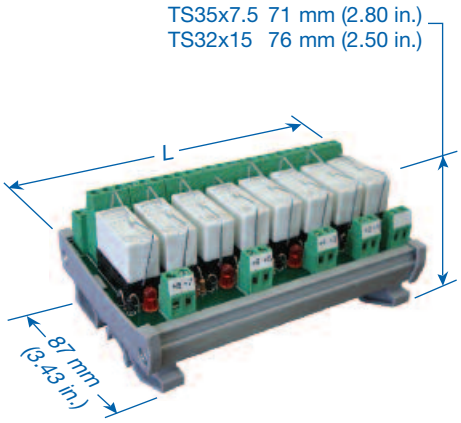


## RC2 / RM2 (Double Pole Double Throw)

Altech Bussed Relay Modules provide high density packaging of miniature general purpose relays with minimal hook-up wiring. Select from bussed DC Positive (DC Negative switching), bussed DC Negative (DC Positive switching), or bussed AC neutral.

Ideal for traditional mechanical relay input/output array between a single logic system and peripheral devices, or between logic systems in a network as well as their peripheral and field devices.

Load your own relays in our RCB Relay Carrier, or order the RMB Relay Module complete with 8 or 16 relays.

Call us with your custom module requirements!

- Screw-Cage Clamp Connections
- Spring Clamp Terminals
- LED Coil Voltage Indicator
- Reverse DC Polarity LED Protection
- Surge Suppression With DC Coil
- DIN Rail Mount, Panel Mount Available

### Technical Information

Current .....8 A
Voltage (max) .....250V AC / 24V DC
Wire Range .....0.5-4 $mm^2$ / 30-14 AWG
Torque .....0.5-4 Nm / 4 lbs-in.
Stripping Length ...8 mm

## DPDT

| Number of Channels | Coil Voltage | Screw terminal Carrier Only Part Number | Screw terminal Module with Relays Part Number | Spring terminal Carrier Only Part Number | Spring terminal Module with Relays Part Number | Module Length (L) in mm (in) |
|---|---|---|---|---|---|---|
| 8 Channel, Bussed DC+ | 12V DC ( E) | 8923.5 | 8923.2 | 8923.5/S | 8923.2/S | 125 (4.92) |
| | 24V DC (G) | 8924.5 | 8924.2 | 8924.5/S | 8924.2/S | 125 (4.92) |
| 8 Channel, Bussed DC- | 12V DC ( E) | 8923.6 | 8923.3 | 8923.6/S | 8923.3/S | 125 (4.92) |
| | 24V DC (G) | 8924.6 | 8924.4 | 8924.6/S | 8924.4/S | 125 (4.92) |
| 8 Channel, Bussed AC (N) | 110V AC (U) | 8925.5 | 8925.2 | 8925.5/S | 8925.2/S | 125 (4.92) |
| | 220V AC (X) | 8925.6 | 8925.3 | 8925.6/S | 8925.3/S | 125 (4.92) |
| 16 Channel, Bussed DC+ | 12V DC ( E) | 8926.5 | 8926.2 | 8926.5/S | 8926.2/S | 248 (9.76) |
| | 24V DC (G) | 8926.6 | 8926.3 | 8926.6/S | 8926.3/S | 248 (9.76) |
| 16 Channel, Bussed DC- | 12V DC ( E) | 8927.5 | 8927.2 | 8927.5/S | 8927.2/S | 248 (9.76) |
| | 24V DC (G) | 8927.6 | 8927.3 | 8927.6/S | 8927.3/S | 248 (9.76) |
| 16 Channel, Bussed AC(N) | 110V AC (U) | 8928.5 | 8928.2 | 8928.5/S | 8928.2/S | 248 (9.76) |
| | 220V AC (X) | 8928.6 | 8928.3 | 8928.6/S | 8928.3/S | 248 (9.76) |




DATA SUBJECT TO CHANGE WITHOUT NOTICE

### CONTACT SPECIFICATIONS*

DPDT Rating .....8A
Relay Socket.....8A
Terminal Block.....15A
PCB Trace for Contact Circuit
at 30°C (86°F) temperature rise NC.....8A
PCB Trace for Coil Circuit
at 30°C (86°F) temperature rise .....2A
PCB Trace for Bus
at 30°C (86°F) temperature rise .....16A
Relay Contact Material.....AgNi
Rated load (capacity) .....8A at 250VAC / 24VDC
Min. switching voltage.....5 V
Min. switching current.....5mA
Min. breaking capacity.....0.3W

### RELAY PINOUT*

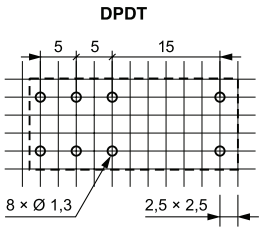


### COIL SPECIFICATIONS*

Ambient Temperature..... -40°C-+85°C (-40°F-+185°F)

| Coil Voltage AC / DC | Coil operating range V AC / DC | | Coil Current in mA | Coil resistance at 20°C in Ω | Acceptable resistance |
|---|---|---|---|---|---|
| | Min. | Max. | | | |
| 12 VDC | 8.4 | 30.6 | 40 | 360 | ± 10 % |
| 24 VDC | 16.8 | 61.2 | 20 | 1440 | ± 10 % |
| 110 VAC | 88 | 132 | 4.4 | 8900 | ± 10 % |
| 220 VAC | 176 | 264 | 2.2 | 35500 | ± 10 % |

### CONTACT CIRCUITS*

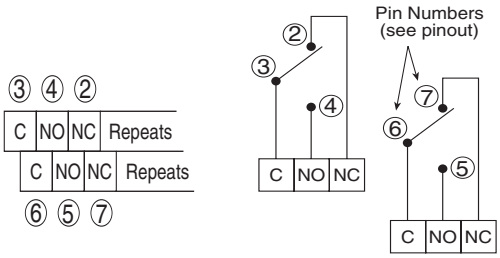


### COIL CIRCUITS

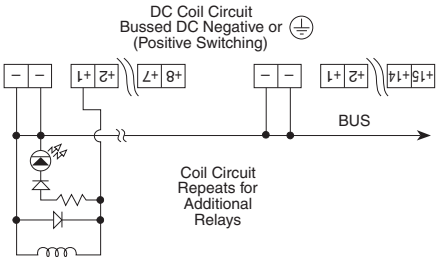


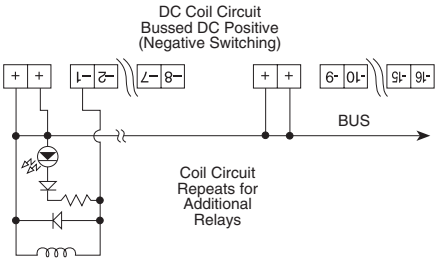


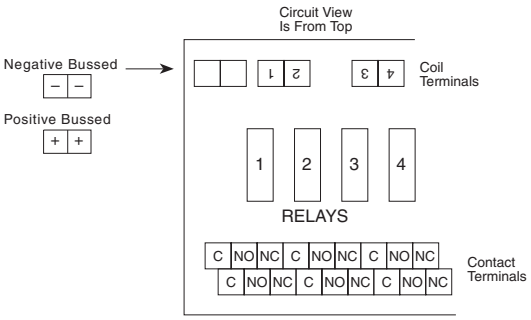


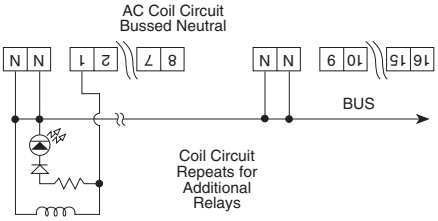


* For more information please see page 76 (Relay RM84)



DATA SUBJECT TO CHANGE WITHOUT NOTICE

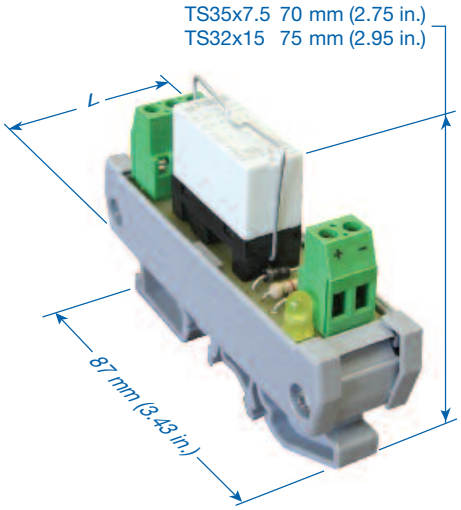


## RMH1 - 1 Channel (Single Pole Double Throw)

A true high-current rating in a DIN Rail mount miniature relay module. The miniature relays used in the Altech RMH have a SPDT (Form C) 16 Amp continuous current rating, developed from dual 8 Amp contacts that are internally connected in parallel. The relay socket is rated dual 8 Amp. Printed circuit traces are balanced, rated 16 Amp and connect to Altech terminal blocks UL rated 15A/300V.

Typical relay specifications combined with other module component ratings give module ratings suitable for many control applications.

- Screw-Cage Clamp Connection
- Spring Clamp Terminals
- LED Coil Voltage Indicator
- Reverse DC Polarity LED Protection
- Surge Suppression With DC Coils
- Industry Standard Relays[a]
- DIN Rail Mount, Panel Mount Available

### Technical Information

Current .....16 A
Voltage (max) .....250V AC / 24V DC
Wire Range .....0.5-4 $mm^2$ / 30-14 AWG
Torque .....0.5-4 Nm / 4 lbs-in.
Stripping Length ...8 mm

| SPDT DC | Coil Voltage | Screw terminal Part Number | Spring terminal Part Number | LED (2mA) | Module Length (L) in mm (in) |
|---|---|---|---|---|---|
| 1 Channel | 5V DC | 8905.2 | 8905.2/S | Yellow | 21 (0.83) |
| 1 Channel | 6V DC | 8906.2 | 8906.2/S | Green | 21 (0.83) |
| 1 Channel | 12V DC | 8907.2 | 8907.2/S | Red | 21 (0.83) |
| 1 Channel | 24V DC | 5800.2 | 5800.2/S | Yellow | 21 (0.83) |
| 1 Channel | 48V DC | 5802.2 | 5802.2/S | Green | 21 (0.83) |
| 1 Channel | 60V DC | 8908.2 | 8908.2/S | Red | 21 (0.83) |
| 1 Channel | 110V DC | 5803.2 | 5803.2/S | Red | 21 (0.83) |

| SPDT AC | Coil Voltage | Screw terminal Part Number | Spring terminal Part Number | LED (2mA) | Module Length (L) in mm (in) |
|---|---|---|---|---|---|
| 1 Channel | 6V AC | 8909.2 | 8909.2/S | Green | 21 (0.83) |
| 1 Channel | 12V AC | 8910.2 | 8910.2/S | Red | 21 (0.83) |
| 1 Channel | 24V AC | 5801.2 | 5801.2/S | Red | 21 (0.83) |
| 1 Channel | 50V AC | 8911.2 | 8911.2/S | Red | 21 (0.83) |
| 1 Channel | 110V AC | 5804.2 | 5804.2/S | Yellow | 21 (0.83) |
| 1 Channel | 220V AC | 5805.2 | 5805.2/S | Green | 21 (0.83) |
| 1 Channel | 240V AC | 5806.2 | 5806.2/S | Red | 21 (0.83) |



DATA SUBJECT TO CHANGE WITHOUT NOTICE

### GENERAL RELAY SPECIFICATIONS*

Mechanical Life (cycles).....> 3 x $10^7$
Max operating frequency
- at rated load.....600 cycles/hour
- no load .....72000 cycles/hour

Operating / release time .....7 ms/ 3 ms

### COIL SPECIFICATIONS*

Contact material .....AgNi
Rated load ( capacity) .....16A at 250V AC / 24 V DC
Max. breaking capacity.....4000 VA
Min. breaking capacity.....0.3 W
Electrical life ( resistive AC1).....> 0.7 x $10^5$

| Coil Voltage AC / DC | Coil operating range V AC / DC | | Coil Current in mA | Coil resistance at 20°C in Ω | Acceptable resistance |
|---|---|---|---|---|---|
| | Min. | Max. | | | |
| 5.0 | 3.5 | 12.7 | 96.0 | 60.0 | ± 10 % |
| 6.0 | 4.2 | 15.3 | 80.0 | 90.0 | ± 10 % |
| 12.0 | 8.4 | 30.6 | 40.0 | 360.0 | ± 10 % |
| 24.0 | 16.8 | 61.2 | 20.0 | 1,440.0 | ± 10 % |
| 48.0 | 33.6 | 122.4 | 10.0 | 5,700.0 | ± 10 % |
| 60.0 | 42.0 | 153.0 | 8.0 | 7,500.0 | ± 10 % |
| 110.0 | 77.0 | 280.0 | 4.4 | 25,200.0 | ± 10 % |

### RELAY PINOUT*

SPDT

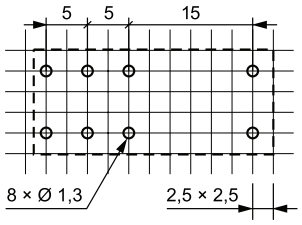


### CONTACT CIRCUITS*

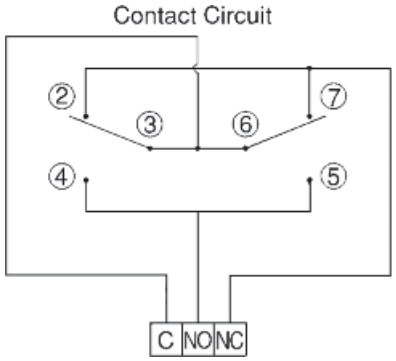


### COIL CIRCUITS

#### AC COIL CIRCUIT

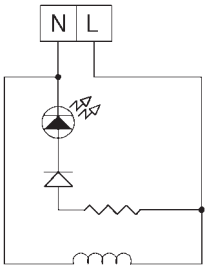


#### DC COIL CIRCUIT

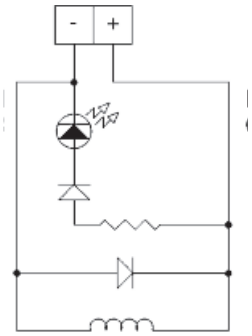


* For more information please see page 76 (Relay RM85)




DATA SUBJECT TO CHANGE WITHOUT NOTICE

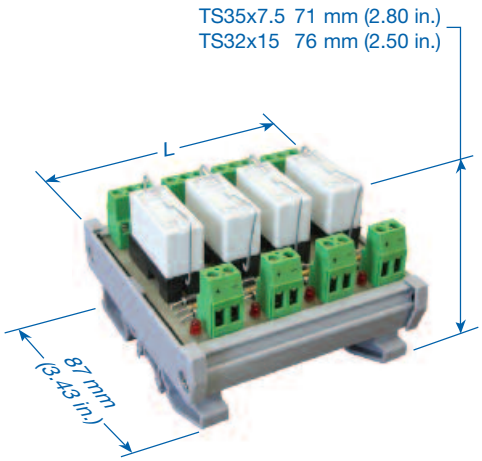


### RMH4 - 4 Channel (Single Pole Double Throw)

A true high-current rating in a DIN Rail mount miniature relay module. The miniature relays used in the Altech RMH have a SPDT (Form C) 16 Amp continuous current rating, developed from dual 8 Amp contacts that are internally connected in parallel. The relay socket is rated dual 8 Amp. Printed circuit traces are balanced, rated 16 Amp and connect to Altech terminal blocks UL rated 15A/300V.

Typical relay specifications combined with other module component ratings give module ratings suitable for many control applications.

- Screw-Cage Clamp Connection
- Spring Clamp Terminals
- LED Coil Voltage Indicator
- Reverse DC Polarity LED Protection
- Surge Suppression With DC Coils
- Industry Standard Relays[a]
- DIN Rail Mount, Panel Mount Available

**Technical Information**

Current .....16 A
Voltage (max) .....250V AC / 24V DC
Wire Range .....0.5-4 $mm^2$ / 30-14 AWG
Torque .....0.5-4 Nm / 4 lbs-in.
Stripping Length ...8 mm

| SPDT DC | Coil Voltage | Screw terminal Part Number | Spring terminal Part Number | LED (2mA) | Module Length (L) in mm (in) |
|---|---|---|---|---|---|
| 4 Channel | 5V DC | 8905.3 | 8905.3/S | Yellow | 79 (3.11) |
| 4 Channel | 6V DC | 8906.3 | 8906.3/S | Green | 79 (3.11) |
| 4 Channel | 12V DC | 8907.3 | 8907.3/S | Red | 79 (3.11) |
| 4 Channel | 24V DC | 5800.3 | 5800.3/S | Yellow | 79 (3.11) |
| 4 Channel | 48V DC | 5802.3 | 5802.3/S | Green | 79 (3.11) |
| 4 Channel | 60V DC | 8908.3 | 8908.3/S | Red | 79 (3.11) |
| 4 Channel | 110V DC | 5803.3 | 5803.3/S | Red | 79 (3.11) |

| SPDT AC | Coil Voltage | Screw terminal Part Number | Spring terminal Part Number | LED (2mA) | Module Length (L) in mm (in) |
|---|---|---|---|---|---|
| 4 Channel | 6V AC | 8909.3 | 8909.3/S | Green | 79 (3.11) |
| 4 Channel | 12V AC | 8910.3 | 8910.3/S | Red | 79 (3.11) |
| 4 Channel | 24V AC | 5801.3 | 5801.3/S | Red | 79 (3.11) |
| 4 Channel | 50V AC | 8911.3 | 8911.3/S | Red | 79 (3.11) |
| 4 Channel | 110V AC | 5804.3 | 5804.3/S | Yellow | 79 (3.11) |
| 4 Channel | 220V AC | 5805.3 | 5805.3/S | Green | 79 (3.11) |
| 4 Channel | 240V AC | 5806.3 | 5806.3/S | Red | 79 (3.11) |



DATA SUBJECT TO CHANGE WITHOUT NOTICE

### GENERAL RELAY SPECIFICATIONS*

Mechanical Life (cycles).....> 3 x $10^7$
Max operating frequency
- at rated load.....600 cycles/hour
- no load .....72000 cycles/hour

Operating / release time .....7 ms/ 3 ms

### COIL SPECIFICATIONS*

Contact material .....AgNi
Rated load ( capacity) .....16A at 250V AC / 24 V DC
Max. breaking capacity.....4000 VA
Min. breaking capacity.....0.3 W
Electrical life ( resistive AC1).....> 0.7 x $10^5$

| Coil Voltage AC / DC | Coil operating range V AC / DC | | Coil Current in mA | Coil resistance at 20°C in Ω | Acceptable resistance |
|---|---|---|---|---|---|
| | Min. | Max. | | | |
| 5.0 | 3.5 | 12.7 | 96.0 | 60.0 | ± 10 % |
| 6.0 | 4.2 | 15.3 | 80.0 | 90.0 | ± 10 % |
| 12.0 | 8.4 | 30.6 | 40.0 | 360.0 | ± 10 % |
| 24.0 | 16.8 | 61.2 | 20.0 | 1,440.0 | ± 10 % |
| 48.0 | 33.6 | 122.4 | 10.0 | 5,700.0 | ± 10 % |
| 60.0 | 42.0 | 153.0 | 8.0 | 7,500.0 | ± 10 % |
| 110.0 | 77.0 | 280.0 | 4.4 | 25,200.0 | ± 10 % |

### RELAY PINOUT*

SPDT

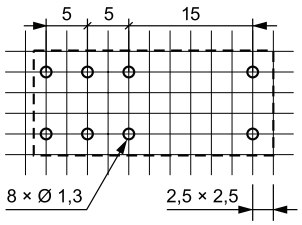


### CONTACT CIRCUITS*

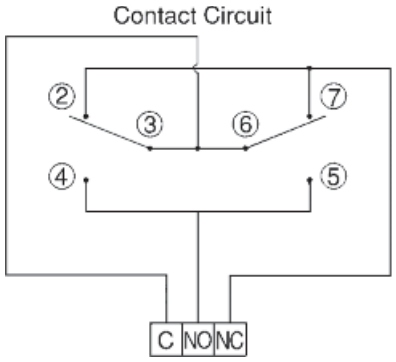


### COIL CIRCUITS

#### AC COIL CIRCUIT

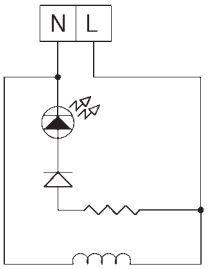


#### DC COIL CIRCUIT

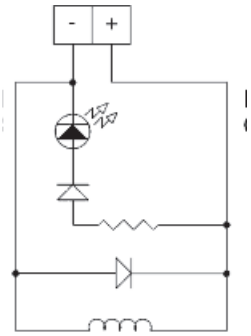


* For more information please see page 76 (Relay RM85)



DATA SUBJECT TO CHANGE WITHOUT NOTICE

# Safety Relay Modules

## Isolated Channels - 8 Amp Contacts, 35 or 32 DIN Rail

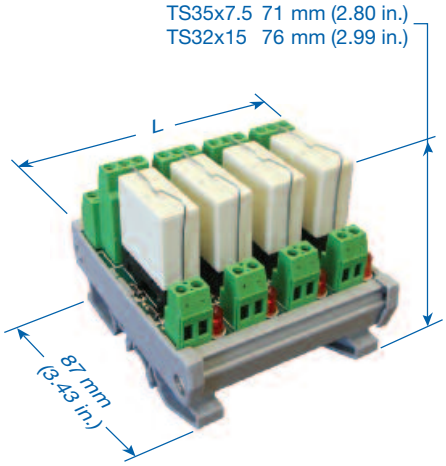


### Isolated Channel (Double Pole Double Throw)

Altech Safety Relay Modules utilize Relays with Force-Guided-Contacts that meet or exceed international standards, TÜV and UL. They are designed to protect man and machine as specified in OSHA FR1910 Regulations, a mandatory requirement of the European Machinery Directive EMD 89.392 EEC. The Safety Relays are used in Safety Devices such as Emergency Stop Modules, Safety Gate Monitors, 2-Hand Safety Modules, etc.

This series of Safety Relay Modules are Double Pole, Double Throw configurations, and are available as 1, 2, 4, 8 and 16 isolated channels and 8 and 16 bussed channels with 12 or 24 VDC coils. Isolated channels allow control of each relay by a different logic system, if necessary. There are two inputs for each relay coil per channel. Bussed channels allow high density packaging with a common input for all relays.Safety Relay Modules may be ordered with three different types of relay contact material, depending on the actual load current.

- Screw-Cage Clamp Connection
- LED Coil Voltage Indicator
- Reverse DC Polarity LED Protection
- Surge Suppression With DC Coils
- Industry Standard Relays
- DIN Rail Mount, Panel Mount Available

## DPDT

| Isolated Channel (no bus) | Coil Voltage | Contact Material:Contact Material: $AgSnO_2$+0.2µmAu<br>Contact Ratings: 8A(2x5A) 250VDC, 400VAC<br>Part Number | Contact Material: AgNi10+0.2µmAu<br>Contact Ratings: 8A(2x5A) 250VDC, 400VAC<br>Part Number | AgNi10+5µmAu<br>Contact Ratings: 8A(2x5A) 250VDC, 400VAC<br>Part Number | Module Length (L) in mm (in)" |
|---|---|---|---|---|---|
| 1 Channel | 12V | 8949.2C | 8949.2N | 8949.2S | 21 (0.83) |
| 1 Channel | 24V | 8951.2C | 8951.2N | 8951.2S | 21 (0.83) |
| 2 Channel | 12V | 8949.3C | 8949.3N | 8949.3S | 40 (1.57) |
| 2 Channel | 24V | 8951.3C | 8951.3N | 8951.3S | 40 (1.57) |
| 4 Channel | 12V | 8955.2C | 8955.2N | 8955.2S | 79 (3.11) |
| 4 Channel | 24V | 8956.2C | 8956.2N | 8956.2S | 79 (3.11) |
| 8 Channel | 12V | 8955.3C | 8955.3N | 8955.3S | 157 (6.18) |
| 8 Channel | 24V | 8956.3C | 8956.3N | 8956.3S | 157 (6.18) |
| 16 Channel | 12V | 8963.2C | 8963.2N | 8963.2S | 311 (12.24) |
| 16 Channel | 24V | 8972.2C | 8972.2N | 8972.2S | 311 (12.24) |



DATA SUBJECT TO CHANGE WITHOUT NOTICE

### Relay Pinout

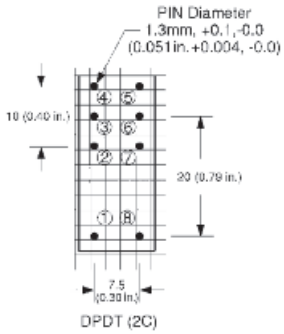


Bottom View. Relay Pinouts, Grid 2.54mm (0.1in.)

### Coil Circuits

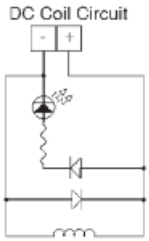


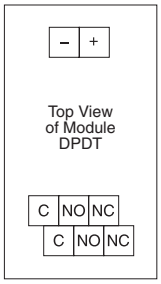


### Contact Circuits

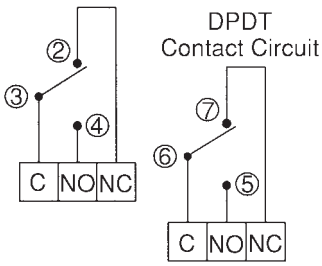


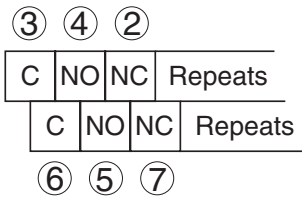


## Relay Specifications

| | |
|---|---|
| -Normal Coil Voltage: | 12,24 VDC |
| -Coil Power Dissipation: | 0.7W |
| -Max. Switching Voltage: | 250 VDC, 400 AC |
| -Max. Switching Current: | 8A(2x5A simultaneous) |
| -Max. Switching Power | |
| DC | 200W (2x160W simultaneous) |
| AC | 2000VA (2x1250VA simultaneous) |
| -Contact Switching Rate: | 10 operations/ sec. |
| -Relay Operate Time | ≤15 ms |
| -Relay Release Time | ≤12 ms |
| -Contact Arrangements | DPDT, 2 FORM C |
| -Contact Material: | |
| Standard | AgNi10+0.2μmAu |
| Optional | $AgSnO_2$+0.2μmAu |
| | AgNi10+5μmAu |
| -Mechanical Life: | ≥$50x10^6$ operation cycles |
| -Ambient Temperature: | -40°+ 70°C |
| -Cover Material: | Polyamide 6 |
| -Weight: | 15g |

## Coil Specifications

| Rated Voltage | Voltage Range | Coil Resistance |
|---|---|---|
| 12VDC | 9.6V-19.2V | 210Ω ± 10% |
| 24VDC | 19.2V-38.4V | 820Ω ± 10% |




DATA SUBJECT TO CHANGE WITHOUT NOTICE

# Safety Relay Modules

## Bussed Channels - 8 Amp Contacts, 35 or 32 DIN Rail

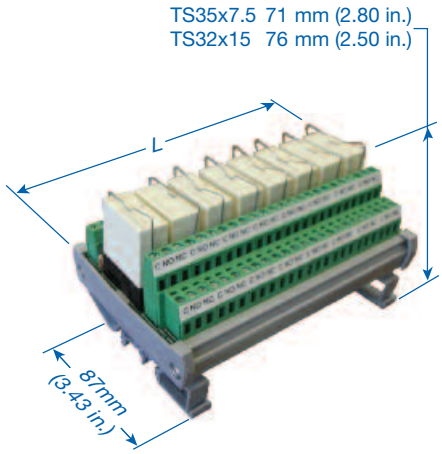


### Bussed Channel (Double Pole Double Throw)

Altech Safety Relay Modules utilize Relays with Force-Guided-Contacts that meet or exceed international standards, TÜV and UL. They are designed to protect man and machine as specified in OSHA FR1910 Regulations, a mandatory requirement of the European Machinery Directive EMD 89.392 EEC. The Safety Relays are used in Safety Devices such as Emergency Stop Modules, Safety Gate Monitors, 2-Hand Safety Modules, etc.

This series of Safety Relay Modules are Double Pole, Double Throw configurations, and are available as 1, 2, 4, 8 and 16 isolated channels and 8 and 16 bussed channels with 12 or 24 VDC coils. Isolated channels allow control of each relay by a different logic system, if necessary. There are two inputs for each relay coil per channel. Bussed channels allow high density packaging with a common input for all relays.Safety Relay Modules may be ordered with three different types of relay contact material, depending on the actual load current.

- Screw-Cage Clamp Connection
- LED Coil Voltage Indicator
- Reverse DC Polarity LED Protection
- Surge Suppression With DC Coils
- Industry Standard Relays
- DIN Rail Mount, Panel Mount Available

## DPDT

| Bussed Channels | Coil Voltage | Contact Material:Contact Material: $AgSnO_2$+0.2µmAu<br>Contact Ratings: 8A(2x5A) 250VDC, 400VAC<br>Part Number | Contact Material: AgNi10+0.2µmAu<br>Contact Ratings: 8A(2x5A) 250VDC, 400VAC<br>Part Number | AgNi10+5µmAu<br>Contact Ratings: 8A(2x5A) 250VDC, 400VAC<br>Part Number | Module Length (L) in mm (in)" |
|---|---|---|---|---|---|
| 8 Channel, DC+ | 12V | 8923.2C | 8923.2N | 8923.2S | 125 (4.92) |
| 8 Channel, DC+ | 24V | 8924.2C | 8924.2N | 8924.2S | 125 (4.92) |
| 8 Channel, DC- | 12V | 8923.3C | 8923.3N | 8923.3S | 125 (4.92) |
| 8 Channel, DC- | 24V | 8924.4C | 8924.4N | 8924.4S | 125 (4.92) |
| 16 Channel, DC+ | 12V | 8926.2C | 8926.2N | 8926.2S | 248 (9.76) |
| 16 Channel, DC+ | 24V | 8926.3C | 8926.3N | 8926.3S | 248 (9.76) |
| 16 Channel, DC- | 12V | 8927.2C | 8927.2N | 8927.2S | 248 (9.76) |
| 16 Channel, DC- | 24V | 8927.3C | 8927.3N | 8927.3S | 248 (9.76) |



DATA SUBJECT TO CHANGE WITHOUT NOTICE

### Relay Pinout

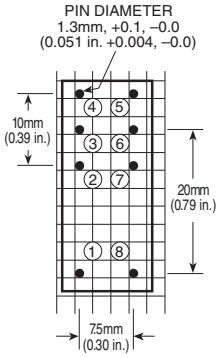


### Coil Circuits

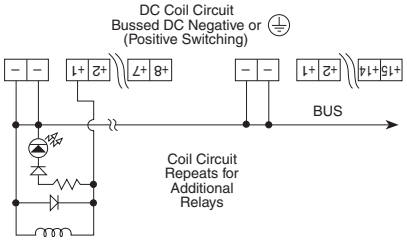


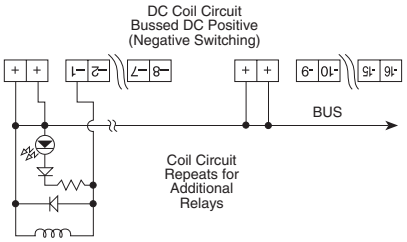


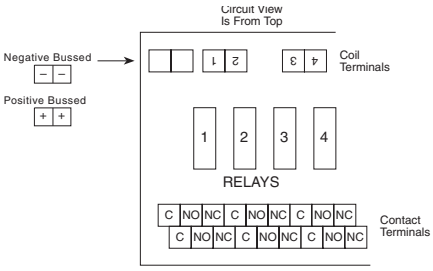


### Contact Circuits

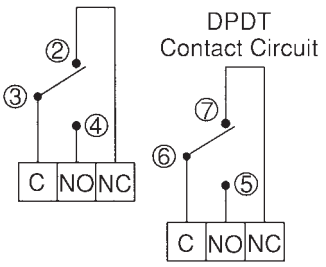


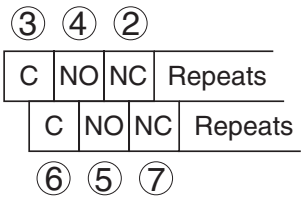


## Relay Specifications

| | |
|---|---|
| -Normal Coil Voltage: | 12,24 VDC |
| -Coil Power Dissipation: | 0.7W |
| -Max. Switching Voltage: | 250 VDC, 400 AC |
| -Max. Switching Current: | 8A(2x5A simultaneous) |
| -Max. Switching Power | |
| DC | 200W (2x160W simultaneous) |
| AC | 2000VA (2x1250VA simultaneous) |
| -Contact Switching Rate: | 10 operations/ sec. |
| -Relay Operate Time | ≤15 ms |
| -Relay Release Time | ≤12 ms |
| -Contact Arrangements | DPDT, 2 FORM C |
| -Contact Material: | |
| Standard | AgNi10+0.2μmAu |
| Optional | $AgSnO_2$+0.2μmAu |
| | AgNi10+5μmAu |
| -Mechanical Life: | ≥$50x10^6$ operation cycles |
| -Ambient Temperature: | -40°+ 70°C |
| -Cover Material: | Polyamide 6 |
| -Weight: | 15g |

## Coil Specifications

| Rated Voltage | Voltage Range | Coil Resistance |
|---|---|---|
| 12VDC | 9.6V-19.2V | 210Ω ± 10% |
| 24VDC | 19.2V-38.4V | 820Ω ± 10% |




DATA SUBJECT TO CHANGE WITHOUT NOTICE

# Safety Relay Modules

## 4 Pole Relays - 8 Amp, 35 or 32 DIN Rail

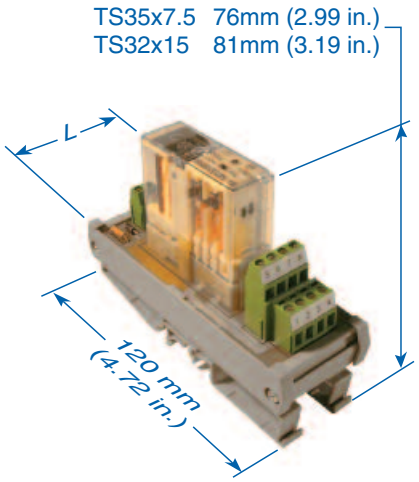


## 4 Pole, 8 Amp

Altech Safety Relay Modules utilize Relays with Force-Guided-Contacts that meet or exceed international standards, TÜV and UL. They are designed to protect man and machine as specified in OSHA CFR1910 Regulations, which is a mandatory requirement of the European Machinery Directive EMD 89.392 EEC.

- Screw-Cage clamp Connections
- LED Coil Voltage Indicator
- Reverse DC Polarity LED Protection
- Surge Suppression With DC Coil
- Din Rail Mount, Panel Mount Available

Altech Safety Relays are electro-mechanical relays that are mechanically linked together, causing all contacts to move together when the coil is energized. Force-Guided-contacts are also known as positive-guided-contacts, captive contacts or locked contacts. In addition, our Safety Relays have Crown Contacts which provide two locations per contacts to improve switching conditions. The Safety Relays are used in Safety Devices such as Emergency Stop Modules, Safety Gate Monitors, 2-Hand Safety Modules, Safety Light Curtains, etc.

This series of Safety Relay Modules consist of 4 pole relays with two choices of configurations (2NO/2NC or 3NO/1NC), with 8 or 10 Amp contacts, and are available as 1,2, and 4 isolated channels with 12, or 24 VDC coils. Isolated channels allows control of each relay by a different logic system, if necessary. There are two inputs for each relay coil per channel. Safety Relay Modules may be ordered with three different types of relay contact material, depending on the actual load current. The part numbers shown in this data sheet are for our standard contact material, which is $AgSnO_2$ + 0.2µmAu.

| | | **Contact Material*:** $AgSnO_2$ + 0.2µmAu<br>**Contact Ratings:** 8A 250VDC, 400VAC<br>**Contact Ratings:** | | |
|---|---|---|---|---|
| | | 2N.0 + 2N.C | 3N.0 + 1N.C | |
| | **Coil Voltage** | **Part Number** | **Part Number** | **Module Length (L) in mm (in)"** |
| 1 Channel | 12V | 156.0A11.1222C | 156.0A11.1231C | 40.10 (1.58) |
| 1 Channel | 24V | 156.0A11.2422C | 156.0A11.2431C | 40.10 (1.58) |
| 2 Channel | 12V | 256.0A11.1222C | 256.0A11.1231C | 78.20 (3.08) |
| 2 Channel | 24V | 256.0A11.2422C | 256.0A11.2431C | 78.20 (3.08) |
| 4 Channel | 12V | 456.0A11.1222C | 456.0A11.1231C | 154.40 (6.08) |
| 4 Channel | 24V | 456.0A11.2422C | 456.0A11.2431C | 154.40 (6.08) |

* Note: Additional relay contact materials are available upon request. Please contact Altech for additional information.



DATA SUBJECT TO CHANGE WITHOUT NOTICE

### 4 Pole, 8 Amp

#### DC Coil Circuits

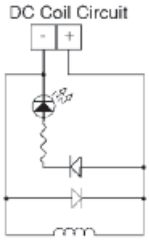


#### Contact Circuits

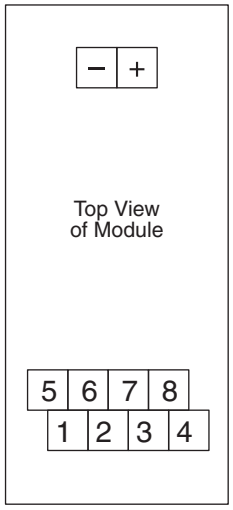


#### Relay Configurations

2 N.O + 2 N.C
NO Pin (1,2), (5,6)
NC Pin (3,4), (7,8)

3 N.O + 1 N.C
NO Pin (1,2), (5,6), (7,8)
NC Pin (3,4)

## Relay Specifications - 8 Amps

| | |
|---|---|
| -Normal Coil Voltage: | 12,24 VDC |
| -Coil Power Dissipation: | 0.6W |
| -Max. Switching Voltage: | 250VDC, 400VAC |
| -Max. Switching Current: | 8A |
| -Max. Switching Power | |
| DC | 200W |
| AC | 2000VA |
| -Contact Switching Rate: | 10 operations/ sec. |
| -Relay Operate Time | 20 ms |
| -Relay Release Time | 6 ms |
| -Contact Arrangements | 2NO/2NC, 3NO/1NC |
| -Contact Material: | |
| Standard | $AgSnO_2$+0.2µmAu |
| Optional | AgNi10+0.2µmAu |
| | AgNi10+5µmAu |
| -Mechanical Life: | ≥50x$10^6$ operation cycles |
| -Ambient Temperature: | -40°+ 85°C |
| -Cover Material: | Thermoplast |
| -Weight: | 35g |

## Coil Specifications

| Rated Voltage | Voltage Range | Coil Resistance |
|---|---|---|
| 12VDC | 8.4V-16.8V | 240Ω ± 10% |
| 24VDC | 16.8V-33.6V | 960Ω ± 10% |




DATA SUBJECT TO CHANGE WITHOUT NOTICE

# Safety Relay Modules

## 4 Pole Relays - 10 Amp, 35 or 32 DIN Rail

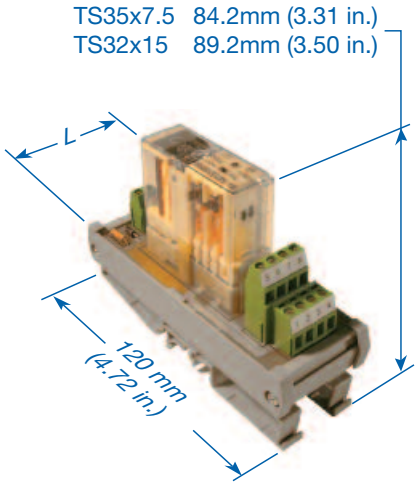


### 4 Pole, 10 Amp

Altech Safety Relay Modules utilize Relays with Force-Guided-Contacts that meet or exceed international standards, TÜV and UL. They are designed to protect man and machine as specified in OSHA CFR1910 Regulations, which is a mandatory requirement of the European Machinery Directive EMD 89.392 EEC.

- Screw-Cage clamp Connections
- LED Coil Voltage Indicator
- Reverse DC Polarity LED Protection
- Surge Suppression With DC Coil
- Din Rail Mount, Panel Mount Available

Altech Safety Relays are electro-mechanical relays that are mechanically linked together, causing all contacts to move together when the coil is energized. Force-Guided-contacts are also known as positive-guided-contacts, captive contacts or locked contacts. In addition, our Safety Relays have Crown Contacts which provide two locations per contacts to improve switching conditions. The Safety Relays are used in Safety Devices such as Emergency Stop Modules, Safety Gate Monitors, 2-Hand Safety Modules, Safety Light Curtains, etc.

This series of Safety Relay Modules consist of 4 pole relays with two choices of configurations (2NO/2NC or 3NO/1NC), with 8 or 10 Amp contacts, and are available as 1,2, and 4 isolated channels with 12, or 24 VDC coils. Isolated channels allows control of each relay by a different logic system, if necessary. There are two inputs for each relay coil per channel. Safety Relay Modules may be ordered with three different types of relay contact material, depending on the actual load current. The part numbers shown in this data sheet are for our standard contact material, which is $AgSnO_2$ + 0.2µmAu.

| | | **Contact Material*:** $AgSnO_2$ + 0.2µmAu<br>**Contact Ratings:** 10A 250VDC, 400VAC<br>**Contact Ratings:** | | |
|---|---|---|---|---|
| | | 2N.0 + 2N.C | 3N.0 +1N.C | |
| | **Coil Voltage** | **Part Number** | **Part Number** | **Module Length (L) in mm (in)"** |
| 1 Channel | 12V | 156.0A01.1222C | 156.0A01.1231C | 40.10 (1.58) |
| 1 Channel | 24V | 156.0A01.2422C | 156.0A01.2431C | 40.10 (1.58) |
| 2 Channel | 12V | 256.0A01.1222C | 256.0A01.1231C | 78.20 (3.08) |
| 2 Channel | 24V | 256.0A01.2422C | 256.0A01.2431C | 78.20 (3.08) |
| 4 Channel | 12V | 456.0A01.1222C | 456.0A01.1231C | 154.40 (6.08) |
| 4 Channel | 24V | 456.0A01.2422C | 456.0A01.2431C | 154.40 (6.08) |

* Note: Additional relay contact materials are available upon request. Please contact Altech for additional information.



DATA SUBJECT TO CHANGE WITHOUT NOTICE

### 4 Pole, 10 Amp

#### DC Coil Circuits

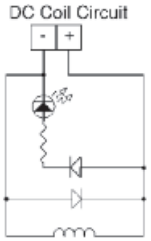


#### Contact Circuits

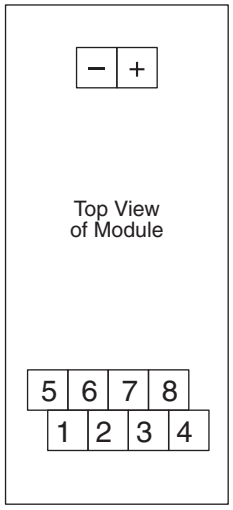


#### Relay Configurations

2 N.O + 2 N.C
NO Pin (3,4), (7,8)
NC Pin (1,2), (5,6)

3 N.O + 1 N.C
NO Pin (3,4), (5,6), (7,8)
NC Pin (1,2)

## Relay Specifications - 10 Amps

| | |
|---|---|
| -Normal Coil Voltage: | 12,24 VDC |
| -Coil Power Dissipation: | 0.75W |
| -Max. Switching Voltage: | 250VDC, 400VAC |
| -Max. Switching Current: | 10A |
| -Max. Switching Power | |
| DC | 240W |
| AC | 2500VA |
| -Contact Switching Rate: | 10 operations/ sec. |
| -Relay Operate Time | 27 ms |
| -Relay Release Time | 5 ms |
| -Contact Arrangements | 2NO/2NC, 3NO/1NC |
| -Contact Material: | |
| Standard | $AgSnO_2$+0.2µmAu |
| Optional | AgNi10+0.2µmAu |
| | AgNi10+5µmAu |
| -Mechanical Life: | >30x$10^6$ operation cycles |
| -Ambient Temperature: | -40°+ 80°C |
| -Cover Material: | Thermoplast |
| -Weight: | 75g |

## Coil Specifications

| Rated Voltage | Voltage Range | Coil Resistance |
|---|---|---|
| 12VDC | 8.4V-19.2V | 192Ω ± 10% |
| 24VDC | 16.8V-38.4V | 770Ω ± 10% |



DATA SUBJECT TO CHANGE WITHOUT NOTICE

# Safety Relay Modules

## 6 Pole Relays - 8 Amp, 35 or 32 DIN Rail

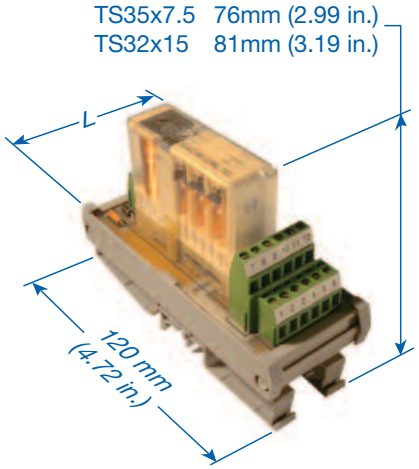


### 6 Pole, 8 Amp

Altech Safety Relay Modules utilize Relays with Force-Guided-Contacts that meet or exceed international standards, TÜV, SA, SUVA, and UL. They are designed to protect man and machine as specified in OSHA CFR1910 Regulations, which is a mandatory requirement of the European Machinery Directive EMD 89.392 EEC.

- Screw-Cage clamp Connections
- LED Coil Voltage Indicator
- Reverse DC Polarity LED Protection
- Surge Suppression With DC Coil
- Din Rail Mount, Panel Mount Available

Altech Safety Relays are electro-mechanical relays that are mechanically linked together, causing all contacts to move together when the coil is energized. Force-Guided-contacts are also known as positive-guided-contacts, captive contacts or locked contacts. In addition, our Safety Relays have Crown Contacts which provides two locations per contacts to improve switching conditions. The Safety Relays are used in Safety Devices such as Emergency Stop Modules, Safety Gate Monitors, 2-Hand Safety Modules, Safety Light Curtains, etc.

This series of Safety Relay Modules consist of 6 pole relays with three configuration choices (2NO+4NC, 3NO+3NC, 4NO+2NC), 8 or 10 Amp contacts and either 1, 2 and 4 isolated channels with 12 or 24 VDC coils. Isolated channels allow control of each relay by a different logic system, if necessary. There are two inputs for each relay coil channel. Modules can ordered with three contact materials, dependent upon the actual current load. The standard contact material is AgCd0+0.2∝mAu.

| | | **Contact Material*:** AgCd0+0.2μmAu<br>**Contact Ratings:** 8A 250VDC,400VAC<br>**Contact Ratings:** | | | |
|---|---|---|---|---|---|
| | | 2N.0 + 4N.C | 3N.0 + 3N.C | 4N.0 + 2N.C | |
| | **Coil Voltage** | **Part Number** | | **Part Number** | **Module Length (L) in mm (in)"** |
| 1 Channel | 12V | 156.0A12.1224C | 156.0A12.1233C | 156.0A12.1242C | 46.45 (1.83) |
| 1 Channel | 24V | 156.0A12.2424C | 156.0A12.2433C | 156.0A12.2442C | 46.45 (1.83) |
| 2 Channel | 12V | 256.0A12.1224C | 256.0A12.1233C | 256.0A12.1242C | 90.90 (3.58) |
| 2 Channel | 24V | 256.0A12.2424C | 256.0A12.2433C | 256.0A12.2442C | 90.90 (3.58) |
| 4 Channel | 12V | 456.0A12.1224C | 456.0A12.1233C | 456.0A12.1242C | 179.80 (7.08) |
| 4 Channel | 24V | 456.0A12.2424C | 456.0A12.2433C | 456.0A12.2442C | 179.80 (7.08) |

* Note: Additional relay contact materials are available upon request. Please contact Altech for additional information.



DATA SUBJECT TO CHANGE WITHOUT NOTICE

### 6 Pole, 8 Amp

#### DC Coil Circuits

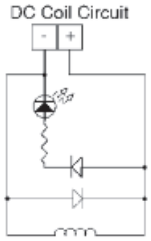


#### Contact Circuits

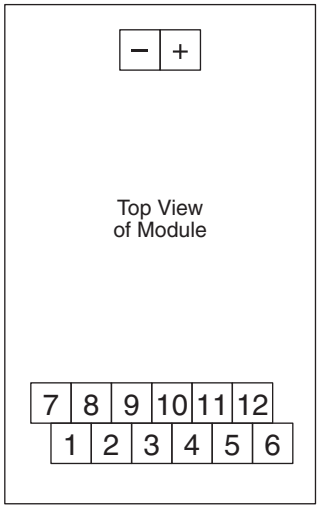


**Relay Configurations**

2N.0 + 4N.C
- NO Pin (1,2), (7,8)
- NC Pin (3,4), (5,6), (9,10), (11,12)

3N.0 + 3N.C
- NO Pin (1,2), (7,8), (9,10)
- NC Pin (3,4), (5,6), (11,12)

4N.0 + 2N.C
- NO Pin (1,2), (3,4), (7,8), (9,10)
- NC Pin (5,6), (11,12)

## Relay Specifications - 8 Amps

| | |
|---|---|
| -Normal Coil Voltage: | 12,24 VDC |
| -Coil Power Dissipation: | 0.8-1.0 W |
| -Max. Switching Voltage: | 250VDC, 400VAC |
| -Max. Switching Current: | 8A |
| -Max. Switching Power | |
| DC | 200W |
| AC | 2000VA |
| -Contact Switching Rate: | 10 operations/ sec. |
| -Relay Operate Time | 20 ms |
| -Relay Release Time | 6 ms |
| -Contact Arrangements | 2NO/4NC, 3NO/3NC, 4NO/2NC |
| -Contact Material: | |
| Standard | $AgSnO_2$+0.2µmAu |
| Optional | AgNi10+.0.2µmAu<br>AgNi10+5µmAu |
| -Mechanical Life: | ≥50x$10^6$ operation cycles |
| -Ambient Temperature: | -40° + 85°C |
| -Cover Material: | Thermoplast |
| -Weight: | 38g |

## Coil Specifications

| Rated Voltage | Voltage Range | Coil Resistance |
|---|---|---|
| 12VDC | 8.4V-16.8V | 145Ω ± 10% |
| 24VDC | 16.8V-33.6V | 600Ω ± 10% |




DATA SUBJECT TO CHANGE WITHOUT NOTICE

# Safety Relay Modules

## 6 Pole Relays - 10 Amp, 35 or 32 DIN Rail

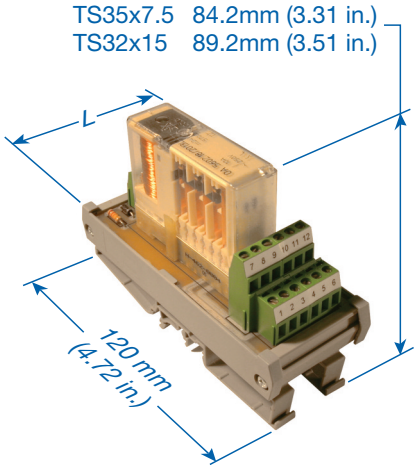


### 6 Pole, 10 Amp

Altech Safety Relay Modules utilize Relays with Force-Guided-Contacts that meet or exceed international standards, TÜV, SA, SUVA, and UL. They are designed to protect man and machine as specified in OSHA CFR1910 Regulations, which is a mandatory requirement of the European Machinery Directive EMD 89.392 EEC.

- Screw-Cage clamp Connections
- LED Coil Voltage Indicator
- Reverse DC Polarity LED Protection
- Surge Suppression With DC Coil
- Din Rail Mount, Panel Mount Available

Altech Safety Relays are electro-mechanical relays that are mechanically linked together, causing all contacts to move together when the coil is energized. Force-Guided-contacts are also known as positive-guided-contacts, captive contacts or locked contacts. In addition, our Safety Relays have Crown Contacts which provides two locations per contacts to improve switching conditions. The Safety Relays are used in Safety Devices such as Emergency Stop Modules, Safety Gate Monitors, 2-Hand Safety Modules, Safety Light Curtains, etc.

This series of Safety Relay Modules consist of 6 pole relays with three configuration choices (2NO+4NC, 3NO+3NC, 4NO+2NC), 8 or 10 Amp contacts and either 1, 2 and 4 isolated channels with 12 or 24 VDC coils. Isolated channels allow control of each relay by a different logic system, if necessary. There are two inputs for each relay coil channel. Modules can ordered with three contact materials, dependent upon the actual current load. The standard contact material is AgCd0+0.2∝mAu.

**Contact Material*:** AgCdO+0.2µmAu

**Contact Ratings:** 10A 250VDC,400VAC

| | | **Contacts:** 2N.0 + 4N.C | 3N.0 + 3N.C | 4N.0 + 2N.C | |
|---|---|---|---|---|---|
| | **Coil Voltage** | **Part Number** | | **Part Number** | **Module Length (L) in mm (in)"** |
| 1 Channel | 12V | 156.0A02.1224C | 156.0A02.1233C | 156.0A02.1242C | 46.45 (1.83) |
| 1 Channel | 24V | 156.0A02.2424C | 156.0A02.2433C | 156.0A02.2442C | 46.45 (1.83) |
| 2 Channel | 12V | 256.0A02.1224C | 256.0A02.1233C | 256.0A02.1242C | 90.90 (3.58) |
| 2 Channel | 24V | 256.0A02.2424C | 256.0A02.2433C | 256.0A02.2442C | 90.90 (3.58) |
| 4 Channel | 12V | 456.0A02.1224C | 456.0A02.1233C | 456.0A02.1242C | 179.80 (7.08) |
| 4 Channel | 24V | 456.0A02.2424C | 456.0A02.2433C | 456.0A02.2442C | 179.80 (7.08) |

* Note: Additional relay contact materials are available upon request. Please contact Altech for additional information.



DATA SUBJECT TO CHANGE WITHOUT NOTICE

### 6 Pole, 10 Amp

#### DC Coil Circuits

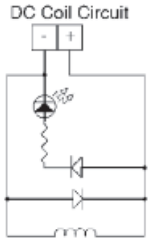


#### Contact Circuits

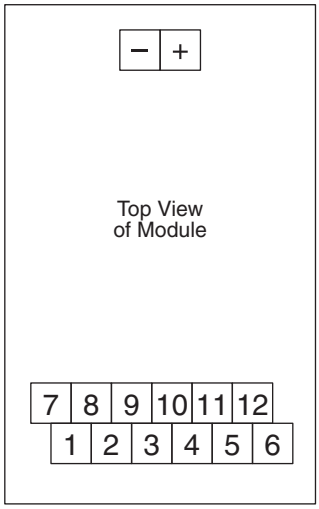


**Relay Configurations**

2N.0 + 4N.C
- NO Pin (5,6), (11,12)
- NC Pin (1,2), (3,4), (7,8), (9,10)

3N.0 + 3N.C
- NO Pin (3,4), (5,6), (11,12)
- NC Pin (1,2), (7,8), (9,10)

4N.0 + 2N.C
- NO Pin (3,4), (5,6), (9,10), (11,12)
- NC Pin (1,2), (7,8)

## Relay Specifications - 10 Amps

| | |
|---|---|
| -Normal Coil Voltage: | 12,24 VDC |
| -Coil Power Dissipation: | 1.0 W |
| -Max. Switching Voltage: | 250VDC, 400VAC |
| -Max. Switching Current: | 10A |
| -Max. Switching Power | |
| DC | 240W |
| AC | 2500VA |
| -Contact Switching Rate: | 10 operations/ sec. |
| -Relay Operate Time | 27 ms |
| -Relay Release Time | 5 ms |
| -Contact Arrangements | 2NO/4NC, 3NO/3NC, 4NO/2NC |
| -Contact Material: | |
| Standard | $AgSnO_2$+0.2µmAu |
| Optional | AgNi10+0.2µmAu |
| | AgNi10+5µmAu |
| -Mechanical Life: | ≥30x$10^6$ operation cycles |
| -Ambient Temperature: | -40°+ 80°C |
| -Cover Material: | Thermoplast |
| -Weight: | 85g |

## Coil Specifications

| Rated Voltage | Voltage Range | Coil Resistance |
|---|---|---|
| 12VDC | 8.4V-19.2V | 140Ω ± 10% |
| 24VDC | 16.8V-38.4V | 570Ω ± 10% |




DATA SUBJECT TO CHANGE WITHOUT NOTICE

# Safety Relay Modules
## 8 Pole - 10 Amp, 35 or 32 DIN Rail

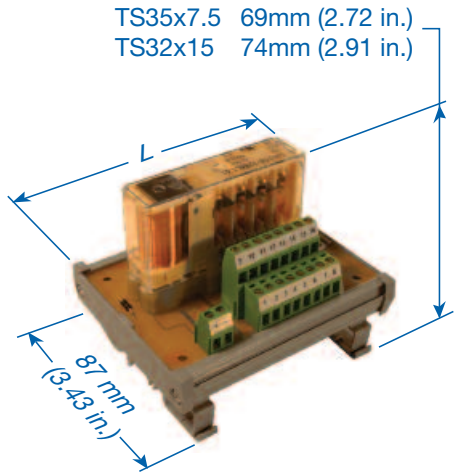


### 8 Pole, 10 Amp

These Safety Relay Modules utilize Relays with Force-Guided-Contacts that meet or exceed international standards, TÜV, SA, SUVA, and UL. They meet the standard EN50205 for safety relays, UL/94/VO fire protection, VDE 0106 Protection Class 11, and VDE 0110/group C 250VAC insulation class.

- Screw-Cage clamp Connections
- LED Coil Voltage Indicator
- Reverse DC Polarity LED Protection
- Surge Suppression With DC Coil
- Din Rail Mount, Panel Mount Available

Altech Safety Relays are electro-mechanical relays that are mechanically linked together, causing all contacts to move together when the coil is energized. Force-Guided-contacts are also known as positive-guided-contacts, captive contacts or locked contacts. In addition, our Safety Relays have Crown Contacts which provides two locations per contacts to improve switching conditions. The Safety Relays are used in Safety Devices such as Emergency Stop Modules, Safety Gate Monitors, 2-Hand Safety Modules, Safety Light Curtains, etc.

This series of Safety Relay Modules consists of 8 pole relays with 10 Amps in six configurations choices. Standard contact material for this series is $AgSnO_2$ + 0.2µmAu.

| | | **Contact Material*:** AgCdO+0.2µmAu<br>**Contact Ratings:** 10A 250VDC,400VAC | | | |
|---|---|---|---|---|---|
| | | 7 NO/1 NC | **Contacts:** 6 NO/2 NC | 5 NO/3 NC | |
| | **Coil Voltage** | **Part Number** | | **Part Number** | **Module Length (L) in mm (in)"** |
| 1 Channel | 12 | 156.0A03.1271C | 156.0A03.1262C | 156.0A03.1253C | 103.6 (4.08) |
| 1 Channel | 24 | 156.0A03.2471C | 156.0A03.2462C | 156.0A03.2453C | 103.6 (4.08) |

| | | 4 NO/4 NC | **Contacts:** 3 NO/5 NC | 2 NO/6 NC | |
|---|---|---|---|---|---|
| | **Coil Voltage** | **Part Number** | | **Part Number** | **Module Length (L) in mm (in)"** |
| 1 Channel | 12 | 156.0A03.1244C | 156.0A03.1235C | 156.0A03.1226C | 103.6 (4.08) |
| 1 Channel | 24 | 156.0A03.2444C | 156.0A03.2435C | 156.0A03.2426C | 103.6 (4.08) |



DATA SUBJECT TO CHANGE WITHOUT NOTICE

## 8 Pole, 10 Amp

### DC Coil Circuits

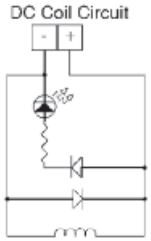


### Contact Circuits

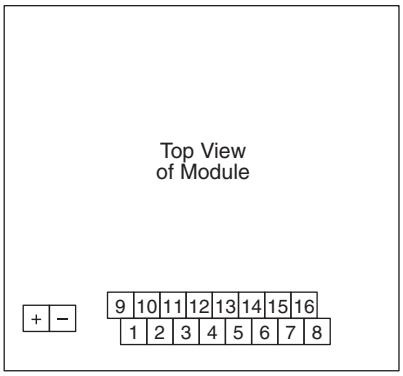


**Relay Configurations**

2NO/6NC
NO Pin (7,8), (15,16)
NC Pin (1,2), (3,4), (5,6), (9,10), (11,12), (13,14)

3NO/5NC
NO Pin (5,6), (7,8), (15,16)
NC Pin (1,2), (3,4), (9,10), (11,12), (13,14)

4NO /4NC
NO Pin (5,6), (7,8), (13,14), (15,16)
NC Pin (1,2), (3,4), (9,10), (11,12), (13,14)

5NO /3NC
NO Pin (3,4), (5,6), (7,8), (13,14), (15,16)
NC Pin (1,2), (9,10), (11,12)

6NO /2NC
NO Pin (3,4), (5,6), (7,8), (11,12), (13,14), (15,16)
NC Pin (1,2), (9,10)

7NO /1NC
NO Pi (1,2), (3,4), (5,6), (7,8), (9,10), (11,12), (13,14), (15,16)
NC Pin (9,10)

## Relay Specifications - 8 Pole

| | |
|---|---|
| -Normal Coil Voltage: | 12, 24 VDC |
| -Coil Power Dissipation: | 1.25-1.65W |
| -Max. Switching Voltage: | 250VDC |
| -Max. Switching Current: | 10A |
| -Max. Switching Power: | 2500VAC |
| -Contact Switching Rate: | 10 operations per second |
| -Relay Operate Time | 27 ms |
| -Relay Release Time | 5 ms |
| -Contact Arrangements: | |
| | 2NO/16NC |
| | 3NO/5NC |
| | 4NO/4NC |
| | 5NO/3NC |
| | 6NO/2NC |
| | 7NO/1NC |
| -Contact Material: | $AgSnO_2$+0.2µmAu |
| -Mechanical Life: | $30x10^6$ operation cycles |
| -Ambient Temperature: | -25° + 75°C |
| -Weight: | 95g |

## Coil Specifications

| Rated Voltage | Min. Pick-up | Coil Resistance |
|---|---|---|
| 12VDC | 8.4V-15.2V | 88Ω/112Ω ± 15%* |
| 24VDC | 16.8V-38.4V | 370Ω/460Ω ± 15%* |

* 88Ω/370Ω for contact arrangements 2NO/6NC, 3NO/5NC

* 112Ω/460Ω for contact arrangements 4NO/4NC, 5NO/3NC/6NO/2NC/7NO/7NC




DATA SUBJECT TO CHANGE WITHOUT NOTICE

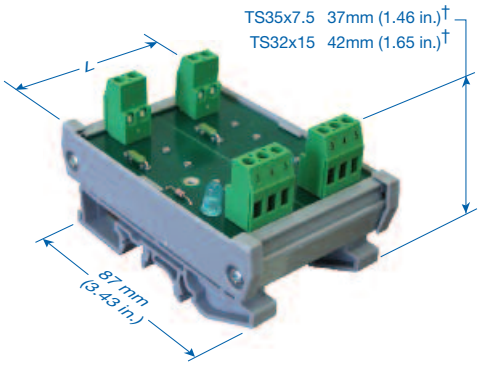


### I/O Isolated

Mount standard opto coupler input/output (I/O) modules in a high density arrangement for logic output to field devices, or for input of field data to the controller. I/O modules optically isolate ICs and PLCs from damaging field voltage spikes and line noise, while controlling up to 3 Amp field current with less than 20mA logic current. Altech I/O Module Carriers can accept up to 16 industry standard 0.6 in. (15.24mm) I/O modules in any combination: Input, Output, AC or DC from most manufacturers.

- Screw-Cage Clamp Connection
- Integral Sockets, Retaining Nut
- Field Voltage Rating: 280V AC/DC[a]
- LED Indication, Fuse Protection
- DIN Rail Mount, Panel Mount Available

*Custom designs can be accommodated!*

Low current LED with dropping resistor for high resistance pull-up and low logic sink/source current requirements.

### Technical Information

Fuse Rating.....5A/125C AC[b]
Wire Range .....0.5-4 mm$^2$ / 22-12 AWG
Torque .....0.5-4 Nm / 4 lbs-in.
Stripping Length ...8 mm

| Part Number | Type | Position | Logic Voltage | LED | Module Length (L) in mm (in) |
|---|---|---|---|---|---|
| 8954.0/B | I/O I-1B | 1 Position | 5V DC | Green | 34.5 (1.36) |
| 8954.0/E | I/O I-1E | 1 Position | 15V DC | Yellow | 34.5 (1.36) |
| 8954.0/G | I/O I-1G | 1 Position | 24V DC | Red | 34.5 (1.36) |
| 8955.0/B | I/O I-2B | 2 Position | 5V DC | Green | 57.8 (2.28) |
| 8955.0/E | I/O I-2E | 2 Position | 15V DC | Yellow | 57.8 (2.28) |
| 8955.0/G | I/O I-2G | 2 Position | 24V DC | Red | 57.8 (2.28) |
| 8956.0/B | I/O I-4B | 4 Position | 5V DC | Green | 114 (4.49) |
| 8956.0/E | I/O I-4E | 4 Position | 15V DC | Yellow | 114 (4.49) |
| 8956.0/G | I/O I-4G | 4 Position | 24V DC | Red | 114 (4.49) |
| 8957.0/B | I/O I-8B | 8 Position | 5V DC | Green | 226 (8.90) |
| 8957.0/E | I/O I-8E | 8 Position | 15V DC | Yellow | 226 (8.90) |
| 8957.0/G | I/O I-8G | 8 Position | 24V DC | Red | 226 (8.90) |

[a] Fuse rating limits field side rating.
- PCB Traces, Field Side: 10A/300V
- PCB Traces, Logic Side: 1A with 6A Bus
- Terminal Blocks: 15A/300V

† Dimension is to top board, add height of relay to determine clearance.

[b] 3A/250V fuse available, please consult Altech.




DATA SUBJECT TO CHANGE WITHOUT NOTICE

### Standard Pinout

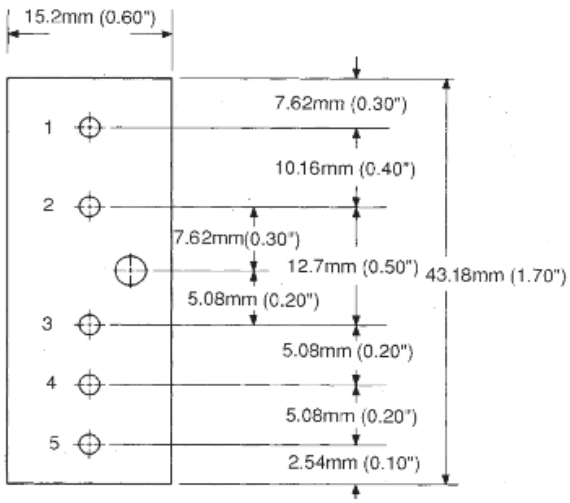


### I/O Isolated Positions

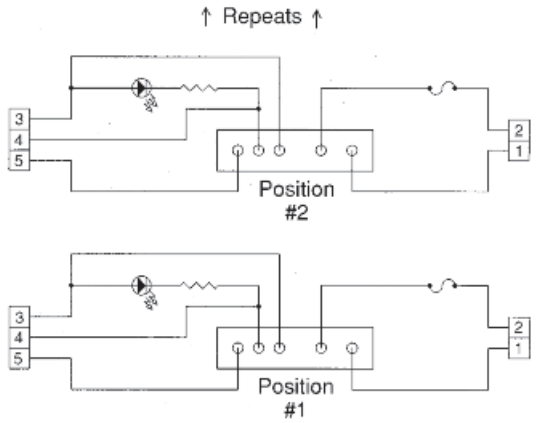


I/O-1 Isolated Positions

## Standard Pinout

*The I/O Module pin utilization information listed below is intended for use only as a guide. For specific applications, please use only the module manufacturer's published specifications.*

**Pins 1 & 2: Field Connections**

- AC Output to field load, inductive up to 3.5A at nominal 24V AC, 120V AC or 240V AC. AC hot to either pin, field load on other pin.
- DC Output to field load (inductive OK with commutating diode). Some modules polarized with pin #1 positive (+). Standard output voltages 60V DC (5-60), 200V DC (10-200).
- AC Input of field data to the logic, 10mA max at nominal 24V AC (18-36), 120V AC (90-140) and 240V AC (90-280). Field signal to either pin.
- DC Input of field data to the logic, some modules dual rated AC/DC, other nominal 5-28V DC (min. 4, max. 32), and nominal 12-48V DC (min. 10, max. 60). Some modules polarized with pin #1 (+).

**Pin 3: VCC Logic Power**

- Standard modules are available in three nominal logic voltages: 5V DC (normally min. 3 to max. 6), 15V DC (12 to 18) and 24V DC (20 to 30).

**Pin 4: Logic Signal**

- Output - Logic ground (sink) on pin #4 closes output circuit (pin #1 to pin #2 normally open, shorts with sink on input pin #4). A few positive-logic modules are available.
- Input - Field signal to pins #1 and #2 gives 20-25mA sink at pin #4 (to pin #5).

**Pin 5: Logic Ground**

- On input modules only (no pin #5 on output modules).



DATA SUBJECT TO CHANGE WITHOUT NOTICE

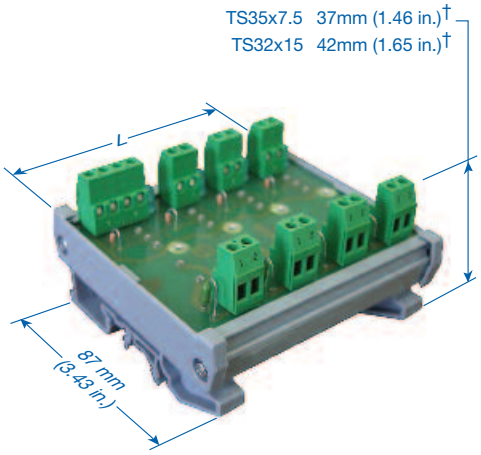


### I/O Bussed

Mount standard opto coupler input/output (I/O) modules in a high density arrangement for logic output to field devices, or for input of field data to the controller. I/O modules optically isolate ICs and PLCs from damaging field voltage spikes and line noise, while controlling up to 3 Amp field current with less than 20mA logic current. Altech I/O Module Carriers can accept up to 16 industry standard 0.6 in. (15.24mm) I/O modules in any combination: Input, Output, AC or DC from most manufacturers.

- Screw-Cage Clamp Connection
- Integral Sockets, Retaining Nut
- Field Voltage Rating: 280V AC/DC[a]
- LED Indication, Fuse Protection
- DIN Rail Mount, Panel Mount Available

*Custom designs can be accommodated!*

Logic status LED which uses the I/O module impedance as its dropping resistor.

### Technical Information

Fuse Rating.....5A/125C AC[b]
Wire Range .....0.5-4 mm$^2$ / 22-12 AWG
Torque .....0.5-4 Nm / 4 lbs-in.
Stripping Length ...8 mm

| Part Number | Type | Position | Logic Voltage | LED | Module Length (L) in mm (in) |
|---|---|---|---|---|---|
| 8956.0 | I/O B-4 | 4 Position | 5 to 24V DC | Green | 114 (4.49) |
| 8959.0 | I/O B-8 | 8 Position | 5 to 24V DC | Green | 183 (7.20) |
| 8861.0 | I/O B-16 | 16 Position | 5 to 24V DC | Green | 363 (14.30) |

[a] Fuse rating limits field side rating.
- PCB Traces, Field Side: 10A/300V
- PCB Traces, Logic Side: 1A with 6A Bus
- Terminal Blocks: 15A/300V

† Dimension is to top board, add height of relay to determine clearance.

[b] 3A/250V fuse available, please consult Altech.




DATA SUBJECT TO CHANGE WITHOUT NOTICE

### Standard Pinout

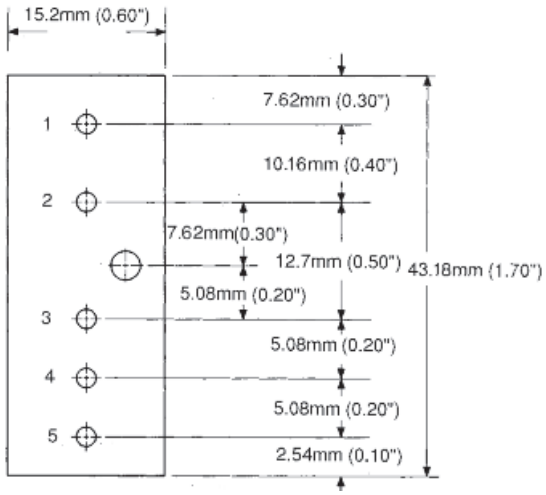


### I/O Bussed Positions

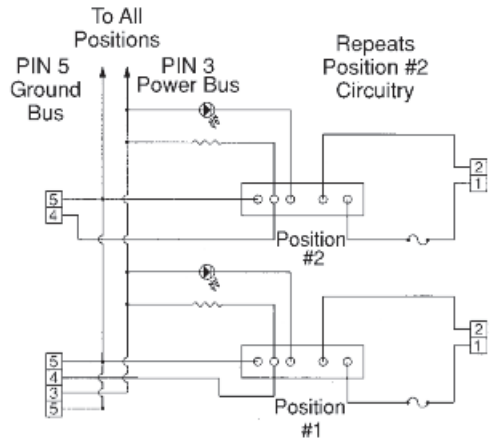


I/O Bussed Positions

## Standard Pinout

*The I/O Module pin utilization information listed below is intended for use only as a guide. For specific applications, please use only the module manufacturer's published specifications.*

**Pins 1 & 2: Field Connections**

- AC Output to field load, inductive up to 3.5A at nominal 24V AC, 120V AC or 240V AC. AC hot to either pin, field load on other pin.
- DC Output to field load (inductive OK with commutating diode). Some modules polarized with pin #1 positive (+). Standard output voltages 60V DC (5-60), 200V DC (10-200).
- AC Input of field data to the logic, 10mA max at nominal 24V AC (18-36), 120V AC (90-140) and 240V AC (90-280). Field signal to either pin.
- DC Input of field data to the logic, some modules dual rated AC/DC, other nominal 5-28V DC (min. 4, max. 32), and nominal 12-48V DC (min. 10, max. 60). Some modules polarized with pin #1 (+).

**Pin 3: VCC Logic Power**

- Standard modules are available in three nominal logic voltages: 5V DC (normally min. 3 to max. 6), 15V DC (12 to 18) and 24V DC (20 to 30).

**Pin 4: Logic Signal**

- Output - Logic ground (sink) on pin #4 closes output circuit (pin #1 to pin #2 normally open, shorts with sink on input pin #4). A few positive-logic modules are available.
- Input - Field signal to pins #1 and #2 gives 20-25mA sink at pin #4 (to pin #5).

**Pin 5: Logic Ground**

- On input modules only (no pin #5 on output modules).



DATA SUBJECT TO CHANGE WITHOUT NOTICE

# PCB Mounting Tracks

## Narrow & Wide Mounting Track Extrusion and Components

Mount standard or custom printed circuit boards in Mounting Tracks which can be conveniently DIN rail or panel mounted in your control panel or cabinet. These are the same tracks used for Altech interface modules. We now make them available to you to house and protect your custom boards, etc. Tracks are easily cut to size or can be ordered precut to specific lengths. They are easily assembled from standard components and snap onto 35mm DIN rail or can be panel mounted.

Each track has two sets of printed circuit board guides to accept two alternate board widths.

End Sections hold printed circuit boards securely in place and keep out foreign objects.

### MOUNTING

When mounting extrusions on DIN rail, order two or more DIN Rail mounting feet. These feet slide into grooves on the extrusion. Then attach two DIN Rail Mount End Sections with help of EPS screws.

To panel mount, order two Panel Mount End Sections (and EPS screws), each with an integral mounting flange with a 6 x 8mm (.24 x .32 in.) hole slot.

If desired, tracks can be direct mounted using double sided tape. Order two DIN rail mount end sections (and EPS screws).

- Standard Lengths: 1m (3'-3") or 2m (6'-6")
- Track Material: PVC
- Temperature Limit:
  Short Term - 80°C (176°F)
  Continuous - 70°C (158°F)
- End Section, Foot Material: Polyamide
- Preassembled, Precut Lengths Available
- Tracks Accept Standard MT2 Marking Tags

## Sizing Information

| Printed Circuit Board Width | |
|---|---|
| Track Type | High Guide (HG) |
| MTGTK1 | 73 ± 1mm (2.9 ± 0.05 in.) |

| Mounting Track Extrusion "Cut-to-Size" Formula |
|---|
| Extrusion Length = Printed Circuit Board Length – 4.5mm (.175 in.) |

* Green color available on request.
Contact Altech for more information.

For PC Board Widths 73mm (2.9 in.)

DIN Rail Mount

Panel Mount

| | Part Number | Std. Pk. |
|---|---|---|
| Mounting Track | | |
| 1 meter, grey | MTGTK1/1M | 5 |
| 2 meter, grey | MTGTK1 | 5 |
| 1 meter, green* | MTGTK1/1M/G | 5 |
| 2 meter, green* | MTGTK1/G | 5 |
| Accessories | | |
| DIN Rail Mount End Section, grey | EPDR1 | 100 |
| DIN Rail Mount End Section, green* | EPDR1/G | 100 |
| DIN Rail Mounting Foot, grey | MTGF1 | 100 |
| DIN Rail Mounting Foot, green* | MTGF1/G | 100 |
| Panel Mount End Section, grey | EPDP1 | 100 |
| Panel Mount End Section, green* | EPDP1/G | 100 |
| DIN Rail / Panel Mount End Section Screws #4x1/2", Phillips Pan head (2 required per end section) | EPS | 200 |
| Marking Tags | MT2 | 100 |

## Narrow Mounting Track

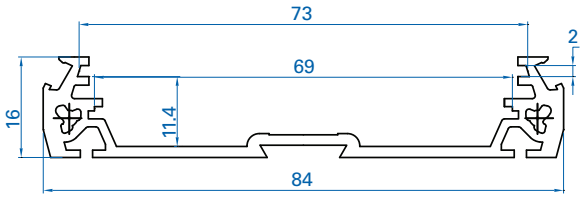


PCB MOUNTING TRACK (73 mm)

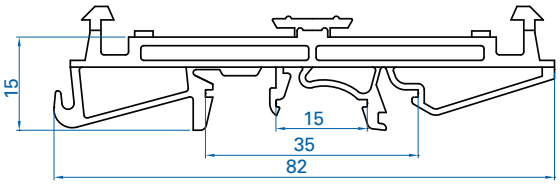


DIN RAIL MOUNTING FOOT (73mm)



DATA SUBJECT TO CHANGE WITHOUT NOTICE

# PCB Mounting Tracks

## Narrow & Wide Mounting Track Extrusion and Components

For PC Board Widths 110mm (4.9 in.)

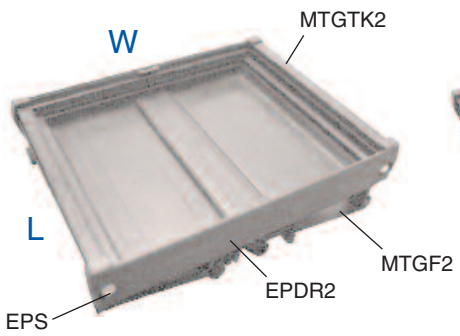


DIN Rail Mount

Panel Mount

| | Part Number | Std. Pk. |
|---|---|---|
| Mounting Track | | |
| 1 meter, grey | MTGTK2/1M | 5 |
| 2 meter, grey | MTGTK2 | 5 |
| 1 meter, green* | MTGTK2/1M/G | 5 |
| 2 meter, green* | MTGTK2/G | 5 |
| Accessories | | |
| DIN Rail Mount End Section, grey | EPDR2 | 100 |
| DIN Rail Mount End Section, green* | EPDR2/G | 100 |
| DIN Rail Mounting Foot, grey | MTGF2 | 100 |
| DIN Rail Mounting Foot, green* | MTGF2/G | 100 |
| Panel Mount End Section, grey | EPDP2 | 100 |
| Panel Mount End Section, green* | EPDP2/G | 100 |
| DIN Rail / Panel Mount End Section Screws #4x1/2", Phillips Pan head (2 required per end section) | EPS | 200 |
| Marking Tags | MT2 | 100 |

## Wide Mounting Track

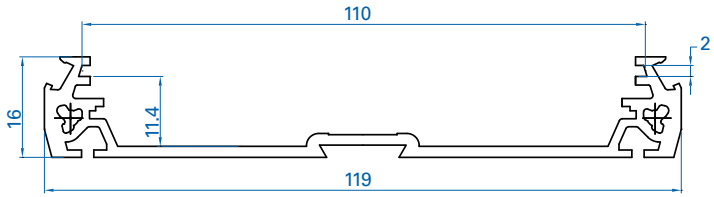


PCB MOUNTING TRACK (110 mm)

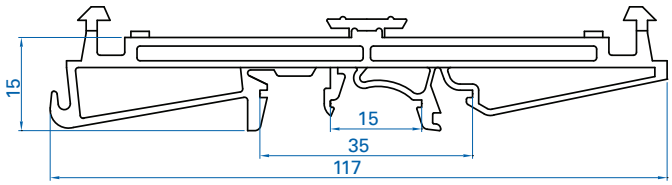


DIN RAIL MOUNTING FOOT (110mm)

## Panel Mount Details

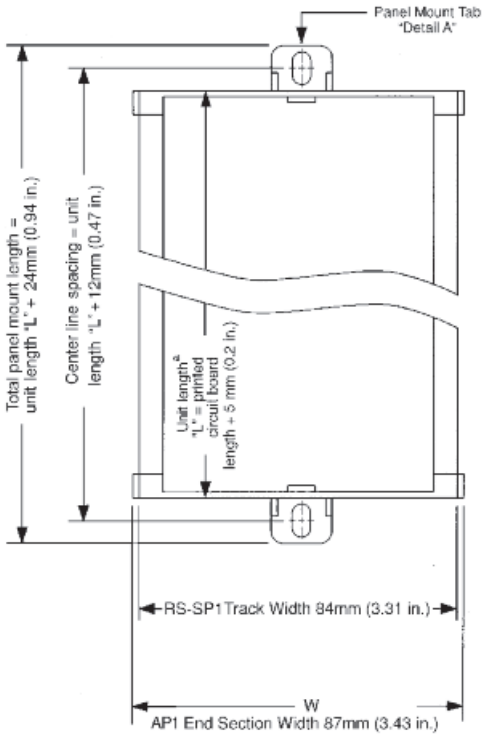


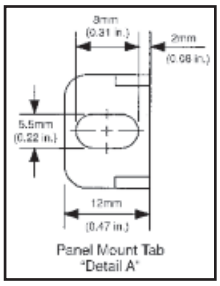


## Sizing Information

| Printed Circuit Board Width | |
|---|---|
| Track Type | High Guide (HG) |
| MTGTK2 | 110 ± 1mm (4.3 ± 0.05 in.) |

| Mounting Track Extrusion "Cut-to-Size" Formula |
|---|
| Extrusion Length = Printed Circuit Board Length – 4.5mm (.175 in.) |

[a]Also applies for DIN Rail Mount Unit



DATA SUBJECT TO CHANGE WITHOUT NOTICE

# CUSTOM INTERFACE MODULES

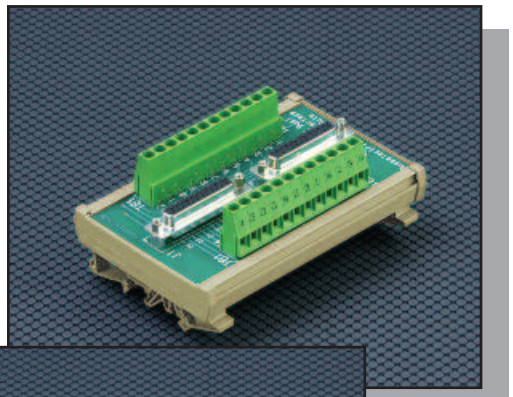

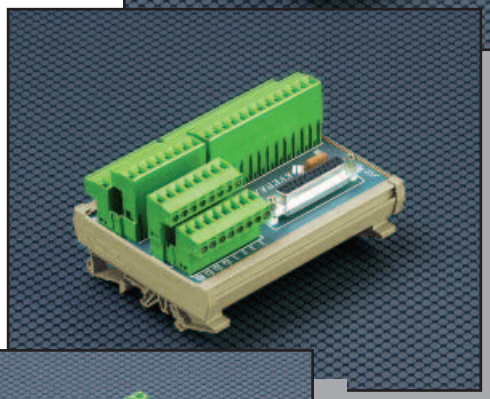

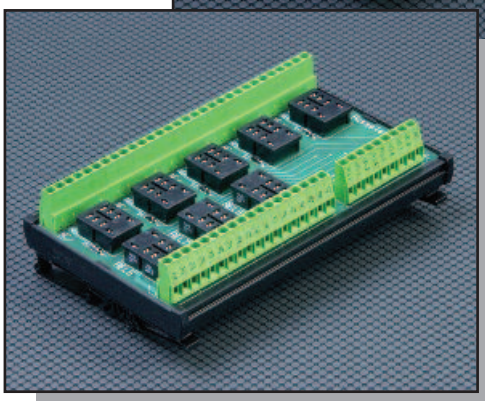

If your design or application requires more functionality or features than our standard product, Altech offers complete engineering, prototype and production services for custom modules.

Our staff has the ability to take your design or requirements and manufacture your custom module. Custom module production generally includes engineering, PCB layout and prototypes, packaged in Altech extrusions for mounting on panels or DIN Rail. In many industrial control systems, customized designs are the solution for many problems.

Altech provides a quick turnaround and competitive solution to your problem. Altech provides the following benefits to your company:

Application Assistance
- Modify a standard product
- Help define a new product

Engineering Capability
- Use of latest CAD system
- PCB layouts completed promptly
- Prototypes available two weeks after PCB layout approval

Manufacturing Capability
- Complete in-house manufacturing
- ISO 9001 Certified

Minimum Quantities
- 25 piece minimum for custom quotes
- Quotation provided at no cost

Altech Benefits
- Fast turnaround due to in-house capability
- Highly competitive in-house manufacturing
- Use of Altech components (blocks, extrusions, connectors)

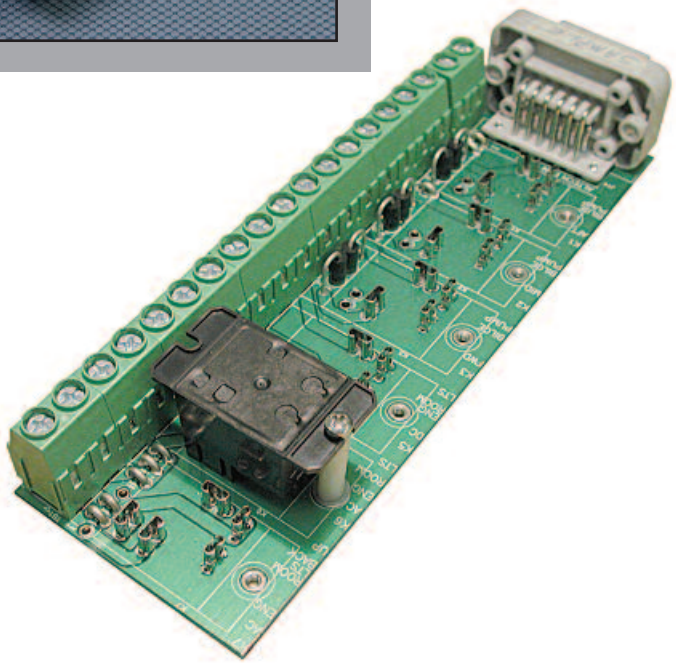



DATA SUBJECT TO CHANGE WITHOUT NOTICE

# CUSTOM ASSEMBLIES AVAILABLE

Altech®

- Most competitive in industry
- Made to your specifications
- Large inventory of components
- Variety of colors available
- Shipped in 3-4 weeks

- DIN Rail Terminal Block Assemblies
- Push Button Control Stations
- Relay Assemblies
- Custom Interface Assemblies
- Enclosure Customization
- Imprinting
- Foot Switch Customization
- New Product Development
- Other Value Added Services.



DATA SUBJECT TO CHANGE WITHOUT NOTICE

# INDEX


| Part No. | Pg. |
|---|---|
| 5492.2 | 20 |
| 5492.5 | 20 |
| 5494.2 | 20 |
| 5494.5 | 20 |
| 5502.2 | 20 |
| 5502.5 | 20 |
| 5506.2 | 20 |
| 5506.5 | 20 |
| 5508.2 | 20 |
| 5508.5 | 20 |
| 5514.2 | 20 |
| 5514.3 | 20 |
| 5514.5 | 20 |
| 5514.6 | 20 |
| 5700.2 | 13 |
| 5701.2 | 13 |
| 5702.2 | 11 |
| 5702.3 | 11 |
| 5702.4 | 11 |
| 5703.2 | 11 |
| 5703.3 | 11 |
| 5703.4 | 11 |
| 5704.2 | 11 |
| 5704.3 | 11 |
| 5704.4 | 11 |
| 5705.2 | 11 |
| 5705.3 | 11 |
| 5705.4 | 11 |
| 5706.2 | 11 |
| 5706.3 | 11 |
| 5706.4 | 11 |
| 5707.2 | 11 |
| 5707.3 | 11 |
| 5707.4 | 11 |
| 5718.2 | 15 |
| 5718.3 | 15 |
| 5719.2 | 15 |
| 5719.3 | 15 |
| 5720.2 | 7 |
| 5721.2 | 7 |
| 5722.2 | 7 |
| 5723.2 | 7 |
| 5724.2 | 7 |
| 5725.2 | 7 |
| 5726.2 | 7 |
| 5727.2 | 7 |
| 5728.2 | 7 |
| 5729.2 | 7 |
| 5740.2 | 8 |
| 5741.2 | 8 |
| 5742.2 | 8 |
| 5743.2 | 8 |
| 5744.2 | 8 |
| 5745.2 | 9 |
| 5746.2 | 9 |
| 5747.2 | 9 |
| 5748.2 | 9 |
| 5749.2 | 9 |
| 5800.2 | 24 |
| 5800.3 | 26 |
| 5801.2 | 24 |
| 5801.3 | 26 |
| 5802.2 | 24 |
| 5802.3 | 26 |
| 5803.2 | 24 |
| 5803.3 | 26 |
| 5804.2 | 24 |
| 5804.3 | 26 |
| 5805.2 | 24 |
| 5805.3 | 26 |
| 5806.2 | 24 |
| 5806.3 | 26 |
| 8835.2 | 12 |
| 8836.2 | 12 |

| Part No. | Pg. |
|---|---|
| 8837.2 | 12 |
| 8838.2 | 12 |
| 8839.2 | 12 |
| 8840.2 | 12 |
| 8842.2 | 11 |
| 8842.3 | 11 |
| 8842.4 | 11 |
| 8850.2 | 11 |
| 8850.3 | 11 |
| 8850.4 | 11 |
| 8861.0 | 44 |
| 8905.2 | 24 |
| 8905.3 | 26 |
| 8906.2 | 24 |
| 8906.3 | 26 |
| 8907.2 | 24 |
| 8907.3 | 26 |
| 8908.2 | 24 |
| 8908.3 | 26 |
| 8909.2 | 24 |
| 8909.3 | 26 |
| 8910.2 | 24 |
| 8910.3 | 26 |
| 8911.2 | 24 |
| 8911.3 | 26 |
| 8912.2 | 20 |
| 8912.3 | 20 |
| 8912.5 | 20 |
| 8912.6 | 20 |
| 8913.3 | 20 |
| 8913.6 | 20 |
| 8914.2 | 20 |
| 8914.5 | 20 |
| 8921.2 | 20 |
| 8921.5 | 20 |
| 8923.2 | 22 |
| 8923.3 | 22 |
| 8923.5 | 22 |
| 8923.6 | 22 |
| 8924.2 | 22 |
| 8924.4 | 22 |
| 8924.5 | 22 |
| 8924.6 | 22 |
| 8925.2 | 22 |
| 8925.3 | 22 |
| 8925.5 | 22 |
| 8925.6 | 22 |
| 8926.2 | 22 |
| 8926.3 | 22 |
| 8926.5 | 22 |
| 8926.6 | 22 |
| 8927.2 | 22 |
| 8927.3 | 22 |
| 8927.5 | 22 |
| 8927.6 | 22 |
| 8928.2 | 22 |
| 8928.3 | 22 |
| 8928.5 | 22 |
| 8928.6 | 22 |
| 8929.2 | 16 |
| 8929.3 | 16 |
| 8929.5 | 16 |
| 8929.6 | 16 |
| 8931.2 | 16 |
| 8931.3 | 16 |
| 8931.5 | 16 |
| 8931.6 | 16 |
| 8932.2 | 16 |
| 8932.5 | 16 |
| 8933.2 | 16 |
| 8933.3 | 16 |
| 8933.5 | 16 |
| 8933.6 | 16 |
| 8935.2 | 16 |

| Part No. | Pg. |
|---|---|
| 8935.3 | 16 |
| 8935.5 | 16 |
| 8935.6 | 16 |
| 8938.2 | 14 |
| 8939.2 | 14 |
| 8940.2 | 16 |
| 8940.3 | 16 |
| 8940.5 | 16 |
| 8940.6 | 16 |
| 8941.2 | 16 |
| 8941.3 | 16 |
| 8941.5 | 16 |
| 8941.6 | 16 |
| 8942.2 | 16 |
| 8942.3 | 16 |
| 8942.5 | 16 |
| 8942.6 | 16 |
| 8943.2 | 16 |
| 8943.3 | 16 |
| 8943.5 | 16 |
| 8943.6 | 16 |
| 8944.2 | 16 |
| 8944.5 | 16 |
| 8945.2 | 18 |
| 8945.5 | 18 |
| 8946.2 | 16 |
| 8946.5 | 16 |
| 8948.2 | 16 |
| 8948.5 | 16 |
| 8949.3 | 18 |
| 8949.6 | 18 |
| 8951.2 | 18 |
| 8951.3 | 18 |
| 8951.5 | 18 |
| 8951.6 | 18 |
| 8953.2 | 18 |
| 8953.3 | 18 |
| 8953.5 | 18 |
| 8953.6 | 18 |
| 8954.2 | 18 |
| 8954.3 | 18 |
| 8954.5 | 18 |
| 8954.6 | 18 |
| 8955.2 | 18 |
| 8955.3 | 18 |
| 8955.5 | 18 |
| 8955.6 | 18 |
| 8956.2 | 18 |
| 8956.3 | 18 |
| 8956.5 | 18 |
| 8956.6 | 18 |
| 8957.2 | 18 |
| 8957.3 | 18 |
| 8957.5 | 18 |
| 8957.6 | 18 |
| 8959.0 | 44 |
| 8959.2 | 18 |
| 8959.3 | 18 |
| 8959.5 | 18 |
| 8959.6 | 18 |
| 8963.2 | 18 |
| 8963.5 | 18 |
| 8972.2 | 18 |
| 8972.5 | 18 |
| 8973.2 | 11 |
| 8973.3 | 11 |
| 8973.4 | 11 |
| 8974.2 | 11 |
| 8974.3 | 11 |
| 8974.4 | 11 |
| 8975.2 | 11 |
| 8975.3 | 11 |
| 8975.4 | 11 |
| 8995.2 | 18 |

| Part No. | Pg. |
|---|---|
| 8995.5 | 18 |
| 8999.2 | 18 |
| 8999.5 | 18 |
| 125 (4.92) | 30 |
| 125 (4.92) | 30 |
| 125 (4.92) | 30 |
| 125 (4.92) | 30 |
| 156.0A01.1222C | 34 |
| 156.0A01.1231C | 34 |
| 156.0A01.2422C | 34 |
| 156.0A01.2431C | 34 |
| 156.0A11.1222C | 32 |
| 156.0A11.1231C | 32 |
| 156.0A11.2422C | 32 |
| 156.0A11.2431C | 32 |
| 156.0A12.1224C | 36 |
| 156.0A12.1224C | 38 |
| 156.0A12.1233C | 36 |
| 156.0A12.1233C | 38 |
| 156.0A12.1242C | 36 |
| 156.0A12.1242C | 38 |
| 156.0A12.2424C | 36 |
| 156.0A12.2424C | 38 |
| 156.0A12.2433C | 36 |
| 156.0A12.2433C | 38 |
| 156.0A12.2442C | 36 |
| 156.0A12.2442C | 38 |
| 156.OA03.1226C | 40 |
| 156.OA03.1235C | 40 |
| 156.OA03.1244C | 40 |
| 156.OA03.1253C | 40 |
| 156.OA03.1262C | 40 |
| 156.OA03.1271C | 40 |
| 156.OA03.2426C | 40 |
| 156.OA03.2435C | 40 |
| 156.OA03.2444C | 40 |
| 156.OA03.2453C | 40 |
| 156.OA03.2462C | 40 |
| 156.OA03.2471C | 40 |
| 248 (9.76) | 30 |
| 248 (9.76) | 30 |
| 248 (9.76) | 30 |
| 248 (9.76) | 30 |
| 256.0A01.1222C | 34 |
| 256.0A01.1231C | 34 |
| 256.0A01.2422C | 34 |
| 256.0A01.2431C | 34 |
| 256.0A11.1222C | 32 |
| 256.0A11.1231C | 32 |
| 256.0A11.2422C | 32 |
| 256.0A11.2431C | 32 |
| 256.0A12.1224C | 36 |
| 256.0A12.1224C | 38 |
| 256.0A12.1233C | 36 |
| 256.0A12.1233C | 38 |
| 256.0A12.1242C | 36 |
| 256.0A12.1242C | 38 |
| 256.0A12.2424C | 36 |
| 256.0A12.2424C | 38 |
| 256.0A12.2433C | 36 |
| 256.0A12.2433C | 38 |
| 256.0A12.2442C | 36 |
| 256.0A12.2442C | 38 |
| 456.0A01.1222C | 34 |
| 456.0A01.1231C | 34 |
| 456.0A01.2422C | 34 |
| 456.0A01.2431C | 34 |
| 456.0A11.1222C | 32 |
| 456.0A11.1231C | 32 |
| 456.0A11.2422C | 32 |
| 456.0A11.2431C | 32 |
| 456.0A12.1224C | 36 |
| 456.0A12.1224C | 38 |
| 456.0A12.1233C | 36 |


**BOLD** - **Regular stocked items.**




DATA SUBJECT TO CHANGE WITHOUT NOTICE

# INDEX


| Part No. | Pg. |
|---|---|
| 456.0A12.1233C | 38 |
| 456.0A12.1242C | 36 |
| 456.0A12.1242C | 38 |
| 456.0A12.2424C | 36 |
| 456.0A12.2424C | 38 |
| 456.0A12.2433C | 36 |
| 456.0A12.2433C | 38 |
| 456.0A12.2442C | 36 |
| 456.0A12.2442C | 38 |
| 5492.2/S | 20 |
| 5492.5/S | 20 |
| 5494.2/S | 20 |
| 5494.5/S | 20 |
| 5502.2/S | 20 |
| 5502.5/S | 20 |
| 5506.2/S | 20 |
| 5506.5/S | 20 |
| 5508.2/S | 20 |
| 5508.5/S | 20 |
| 5514.2/S | 20 |
| 5514.3/S | 20 |
| 5514.5/S | 20 |
| 5514.6/S | 20 |
| 5700.2/S | 13 |
| 5701.2/S | 13 |
| 5718.2/S | 15 |
| 5718.3/S | 15 |
| 5719.2/S | 15 |
| 5719.3/S | 15 |
| 5720.2/S | 7 |
| 5721.2/S | 7 |
| 5722.2/S | 7 |
| 5723.2/S | 7 |
| 5724.2/S | 7 |
| 5725.2/S | 7 |
| 5726.2/S | 7 |
| 5727.2/S | 7 |
| 5728.2/S | 7 |
| 5729.2/S | 7 |
| 5740.2/S | 8 |
| 5741.2/S | 8 |
| 5742.2/S | 8 |
| 5743.2/S | 8 |
| 5744.2/S | 8 |
| 5745.2/S | 9 |
| 5746.2/S | 9 |
| 5747.2/S | 9 |
| 5748.2/S | 9 |
| 5749.2/S | 9 |
| 5800.2/S | 24 |
| 5800.3/S | 26 |
| 5801.2/S | 24 |
| 5801.3/S | 26 |
| 5802.2/S | 24 |
| 5802.3/S | 26 |
| 5803.2/S | 24 |
| 5803.3/S | 26 |
| 5804.2/S | 24 |
| 5804.3/S | 26 |
| 5805.2/S | 24 |
| 5805.3/S | 26 |
| 5806.2/S | 24 |
| 5806.3/S | 26 |
| 8835.2/S | 12 |
| 8836.2/S | 12 |
| 8837.2/S | 12 |
| 8838.2/S | 12 |
| 8839.2/S | 12 |
| 8840.2/S | 12 |
| 8905.2/S | 24 |
| 8905.3/S | 26 |
| 8906.2/S | 24 |
| 8906.3/S | 26 |
| 8907.2/S | 24 |
| 8907.3/S | 26 |
| 8908.2/S | 24 |
| 8908.3/S | 26 |
| 8909.2/S | 24 |
| 8909.3/S | 26 |
| 8910.2/S | 24 |
| 8910.3/S | 26 |
| 8911.2/S | 24 |
| 8911.3/S | 26 |
| 8912.2/S | 20 |
| 8912.3/S | 20 |
| 8912.5/S | 20 |
| 8912.6/S | 20 |
| 8913.3/S | 20 |
| 8913.6/S | 20 |
| 8914.2/S | 20 |
| 8914.5/S | 20 |
| 8921.2/S | 20 |
| 8921.5/S | 20 |
| 8923.2/S | 22 |
| 8923.2C | 30 |
| 8923.2N | 30 |
| 8923.2S | 30 |
| 8923.3/S | 22 |
| 8923.3C | 30 |
| 8923.3N | 30 |
| 8923.3S | 30 |
| 8923.5/S | 22 |
| 8923.6/S | 22 |
| 8924.2/S | 22 |
| 8924.2C | 30 |
| 8924.2N | 30 |
| 8924.2S | 30 |
| 8924.4/S | 22 |
| 8924.4C | 30 |
| 8924.4N | 30 |
| 8924.4S | 30 |
| 8924.5/S | 22 |
| 8924.6/S | 22 |
| 8925.2/S | 22 |
| 8925.3/S | 22 |
| 8925.5/S | 22 |
| 8925.6/S | 22 |
| 8926.2/S | 22 |
| 8926.2C | 30 |
| 8926.2N | 30 |
| 8926.2S | 30 |
| 8926.3/S | 22 |
| 8926.3C | 30 |
| 8926.3N | 30 |
| 8926.3S | 30 |
| 8926.5/S | 22 |
| 8926.6/S | 22 |
| 8927.2/S | 22 |
| 8927.2C | 30 |
| 8927.2N | 30 |
| 8927.2S | 30 |
| 8927.3/S | 22 |
| 8927.3C | 30 |
| 8927.3N | 30 |
| 8927.3S | 30 |
| 8927.5/S | 22 |
| 8927.6/S | 22 |
| 8928.2/S | 22 |
| 8928.3/S | 22 |
| 8928.5/S | 22 |
| 8928.6/S | 22 |
| 8929.2/S | 16 |
| 8929.3/S | 16 |
| 8929.5/S | 16 |
| 8929.6/S | 16 |
| 8931.2/S | 16 |
| 8931.3/S | 16 |
| 8931.5/S | 16 |
| 8931.6/S | 16 |
| 8932.2/S | 16 |
| 8932.5/S | 16 |
| 8933.2/S | 16 |
| 8933.3/S | 16 |
| 8933.5/S | 16 |
| 8933.6/S | 16 |
| 8935.2/S | 16 |
| 8935.3/S | 16 |
| 8935.5/S | 16 |
| 8935.6/S | 16 |
| 8937.2 | 14 |
| 8937.2/S | 14 |
| 8938.2/S | 14 |
| 8939.2/S | 14 |
| 8940.2/S | 16 |
| 8940.3/S | 16 |
| 8940.5/S | 16 |
| 8940.6/S | 16 |
| 8941.2/S | 16 |
| 8941.3/S | 16 |
| 8941.5/S | 16 |
| 8941.6/S | 16 |
| 8942.2/S | 16 |
| 8942.3/S | 16 |
| 8942.5/S | 16 |
| 8942.6/S | 16 |
| 8943.2/S | 16 |
| 8943.3/S | 16 |
| 8943.5/S | 16 |
| 8943.6/S | 16 |
| 8944.2/S | 16 |
| 8944.5/S | 16 |
| 8945.2/S | 18 |
| 8945.5/S | 18 |
| 8946.2/S | 16 |
| 8946.5/S | 16 |
| 8948.2/S | 16 |
| 8948.5/S | 16 |
| 8949.2C | 28 |
| 8949.2N | 28 |
| 8949.2S | 28 |
| 8949.3/S | 18 |
| 8949.3C | 28 |
| 8949.3N | 28 |
| 8949.3S | 28 |
| 8949.6/S | 18 |
| 8951.2/S | 18 |
| 8951.2C | 28 |
| 8951.2N | 28 |
| 8951.2S | 28 |
| 8951.3/S | 18 |
| 8951.3C | 28 |
| 8951.3N | 28 |
| 8951.3S | 28 |
| 8951.5/S | 18 |
| 8951.6/S | 18 |
| 8953.2/S | 18 |
| 8953.3/S | 18 |
| 8953.5/S | 18 |
| 8953.6/S | 18 |
| 8954.0/B | 42 |
| 8954.0/E | 42 |
| 8954.0/G | 42 |
| 8954.2/S | 18 |
| 8954.3/S | 18 |
| 8954.5/S | 18 |
| 8954.6/S | 18 |
| 8955.0/B | 42 |
| 8955.0/E | 42 |
| 8955.0/G | 42 |
| 8955.2/S | 18 |
| 8955.2C | 28 |
| 8955.2N | 28 |
| 8955.2S | 28 |
| 8955.3/S | 18 |
| 8955.3C | 28 |
| 8955.3N | 28 |
| 8955.3S | 28 |
| 8955.5/S | 18 |
| 8955.6/S | 18 |
| 8956.0 | 44 |
| 8956.0/B | 42 |
| 8956.0/E | 42 |
| 8956.0/G | 42 |
| 8956.2/S | 18 |
| 8956.2C | 28 |
| 8956.2N | 28 |
| 8956.2S | 28 |
| 8956.3/S | 18 |
| 8956.3C | 28 |
| 8956.3N | 28 |
| 8956.3S | 28 |
| 8956.5/S | 18 |
| 8956.6/S | 18 |
| 8957.0/B | 42 |
| 8957.0/E | 42 |
| 8957.0/G | 42 |
| 8957.2/S | 18 |
| 8957.3/S | 18 |
| 8957.5/S | 18 |
| 8957.6/S | 18 |
| 8959.2/S | 18 |
| 8959.3/S | 18 |
| 8959.5/S | 18 |
| 8959.6/S | 18 |
| 8963.2/S | 18 |
| 8963.2C | 28 |
| 8963.2N | 28 |
| 8963.2S | 28 |
| 8963.5/S | 18 |
| 8971.2 | 11 |
| 8971.3 | 11 |
| 8971.4 | 11 |
| 8972.2/S | 18 |
| 8972.2C | 28 |
| 8972.2N | 28 |
| 8972.2S | 28 |
| 8972.5/S | 18 |
| 8995.2/S | 18 |
| 8995.5/S | 18 |
| 8999.2/S | 18 |
| 8999.5/S | 18 |
| EPDP1 | 46 |
| EPDP1/G | 46 |
| EPDP2 | 47 |
| EPDP2/G | 47 |
| EPDR1 | 46 |
| EPDR1/G | 46 |
| EPDR2 | 47 |
| EPDR2/G | 47 |
| EPS | 46 |
| EPS | 47 |
| GD35 | 83 |
| GD50 | 83 |
| GUC11 | 65 |
| GZ14U | 70 |
| GZ2 | 65 |
| GZM 80 | 110 |
| GZM 92 | 110 |
| GZM2 | 55 |
| GZM2 | 111 |
| GZM3 | 56 |
| GZM3 | 111 |
| GZM4 | 56 |
| GZM4 | 111 |
| GZM80 | 81 |
| GZM92 | 82 |


**BOLD** - **Regular stocked items.**




DATA SUBJECT TO CHANGE WITHOUT NOTICE

# INDEX


| Part No. | Pg. |
|---|---|
| GZMB2 | 57 |
| GZMB4 | 57 |
| GZMB80 | 83 |
| GZP11 | 69 |
| GZP8 | 69 |
| GZT 80 | 110 |
| GZT 92 | 110 |
| GZT2 | 55 |
| GZT2 | 111 |
| GZT3 | 55 |
| GZT3 | 111 |
| GZT4 | 56 |
| GZT4 | 111 |
| GZT80 | 81 |
| GZT92 | 82 |
| GZY2G | 65 |
| M103 | 113 |
| M21N | 113 |
| M21P | 113 |
| M31G* | 113 |
| M31R | 113 |
| M32G | 113 |
| M32R | 113 |
| M33G | 113 |
| M33R | 113 |
| M41G | 113 |
| M42G | 113 |
| M43G | 113 |
| M51 | 113 |
| M52 | 113 |
| M53 | 113 |
| M61G* | 113 |
| M61R | 113 |
| M62G | 113 |
| M62R | 113 |
| M63G* | 113 |
| M63R | 113 |
| M71 | 113 |
| M72 | 113 |
| M73 | 113 |
| M91G | 113 |
| M91R | 113 |
| M92G | 113 |
| M92R | 113 |
| M93G | 113 |
| M93R | 113 |
| MT2 | 46 |
| MT2 | 47 |
| MTGF1 | 46 |
| MTGF1/G | 46 |
| MTGF2 | 47 |
| MTGF2/G | 47 |
| MTGTK1 | 46 |
| MTGTK1/1M | 46 |
| MTGTK1/1M/G | 46 |
| MTGTK1/G | 46 |
| MTGTK2 | 47 |
| MTGTK2/1M | 47 |
| MTGTK2/1M/G | 47 |
| MTGTK2/G | 47 |
| **PI6-1P-115VAC/DC** | 91 |
| PI6-1P-12VDC | 91 |
| PI6-1P-230VAC/DC | 91 |
| **PI6-1P-24VAC/DC** | 91 |
| PI6-1P-24VDC | 91 |
| PI6-1P-36VDC | 91 |
| PI6-1P-42VAC/DC | 91 |
| PI6-1T-230VAC/DC | 92 |
| PI6-1T-24VAC/DC | 92 |
| **PI6-1T-5...32VDC** | 92 |
| PI6-OC-230VAC/DC | 93 |
| PI6-OC-24VAC/DC | 93 |
| **PI6-OC-5...32VDC** | 93 |
| PI84-012DC-00LD | 104 |

| Part No. | Pg. |
|---|---|
| PI84-012DC-00LV | 104 |
| PI84-024DC-00LD | 104 |
| PI84-024DC-00LV | 104 |
| PI84-110DC-00LD | 104 |
| PI84-110DC-00LV | 104 |
| PI84-110DC-M43G | 104 |
| PI84-110DC-M93G | 104 |
| PI84-120AC-00LV | 104 |
| **PI84-120AC-M93G** | 104 |
| PI84-12DC-M41G | 104 |
| PI84-12DC-M91G | 104 |
| PI84-230AC-00LV | 104 |
| PI84-230AC-M93G | 104 |
| **PI84-24DC-M41G** | 104 |
| **PI84-24DC-M91G** | 104 |
| PI85-012DC-00LD | 105 |
| PI85-012DC-00LV | 105 |
| PI85-024DC-00LD | 105 |
| PI85-024DC-00LV | 105 |
| PI85-110DC-00LD | 105 |
| PI85-110DC-00LV | 105 |
| PI85-110DC-M43G | 105 |
| PI85-110DC-M93G | 105 |
| PI85-120AC-00LV | 105 |
| **PI85-120AC-M93G** | 105 |
| PI85-12DC-M41G | 105 |
| PI85-12DC-M91G | 105 |
| PI85-230AC-00LV | 105 |
| PI85-230AC-M93G | 105 |
| **PI85-24DC-M41G** | 105 |
| **PI85-24DC-M91G** | 105 |
| PIR2-012DC-00LD | 106 |
| PIR2-012DC-00LV | 106 |
| **PIR2-024DC-00LD** | 106 |
| **PIR2-024DC-00LV** | 106 |
| PIR2-110DC-00LD | 106 |
| PIR2-110DC-00LV | 106 |
| **PIR2-120AC-00LV** | 106 |
| PIR2-230AC-00LV | 106 |
| PIR2M-012DC-20 | 109 |
| PIR2M-024DC-20 | 109 |
| PIR2M-110DC-20 | 109 |
| PIR2M-115AC-20 | 109 |
| PIR2M-230AC-20 | 109 |
| PIR3-012DC-00LD | 107 |
| PIR3-012DC-00LV | 107 |
| PIR3-024DC-00LD | 107 |
| PIR3-024DC-00LV | 107 |
| PIR3-110DC-00LD | 107 |
| PIR3-110DC-00LV | 107 |
| PIR3-120AC-00LV | 107 |
| PIR3-230AC-00LV | 107 |
| PIR4-012DC-00LD | 108 |
| PIR4-012DC-00LV | 108 |
| **PIR4-024DC-00LD** | 108 |
| **PIR4-024DC-00LV** | 108 |
| PIR4-110DC-00LD | 108 |
| PIR4-110DC-00LV | 108 |
| **PIR4-120AC-00LV** | 108 |
| PIR4-230AC-00LV | 108 |
| PIR6W-1PS-115VAC/DC-C | 97 |
| PIR6W-1PS-115VAC/DC-O | 97 |
| **PIR6W-1PS-115VAC/DC-R** | 96 |
| PIR6W-1PS-115VAC/DC-R01 | 96 |
| PIR6W-1PS-115VAC/DC-T | 97 |
| PIR6W-1PS-12VDC-C | 97 |
| PIR6W-1PS-12VDC-O | 97 |
| PIR6W-1PS-12VDC-R | 96 |
| PIR6W-1PS-12VDC-R01 | 96 |
| PIR6W-1PS-12VDC-T | 97 |
| PIR6W-1PS-230VAC/DC-C | 97 |
| PIR6W-1PS-230VAC/DC-O | 97 |
| PIR6W-1PS-230VAC/DC-R | 96 |
| PIR6W-1PS-230VAC/DC-R01 | 96 |

| Part No. | Pg. |
|---|---|
| **PIR6W-1PS-24VAC/DC-C** | 97 |
| **PIR6W-1PS-24VAC/DC-O** | 97 |
| **PIR6W-1PS-24VAC/DC-R** | 96 |
| **PIR6W-1PS-24VAC/DC-R01** | 96 |
| **PIR6W-1PS-24VAC/DC-T** | 97 |
| PIR6W-1PS-24VDC-C | 97 |
| PIR6W-1PS-24VDC-O | 97 |
| **PIR6W-1PS-24VDC-R** | 96 |
| PIR6W-1PS-24VDC-R01 | 96 |
| PIR6W-1PS-24VDC-T | 97 |
| PIR6W-1PS-36VDC-C | 97 |
| PIR6W-1PS-36VDC-O | 97 |
| PIR6W-1PS-36VDC-R | 96 |
| PIR6W-1PS-36VDC-R01 | 96 |
| PIR6W-1PS-36VDC-T | 97 |
| PIR6W-1PS-42VAC/DC-C | 97 |
| PIR6W-1PS-42VAC/DC-O | 97 |
| PIR6W-1PS-42VAC/DC-R | 96 |
| PIR6W-1PS-42VAC/DC-R01 | 96 |
| PIR6W-1PS-42VAC/DC-T | 97 |
| PIR6W-1PS-48VDC-C | 97 |
| PIR6W-1PS-48VDC-O | 97 |
| PIR6W-1PS-48VDC-R | 96 |
| PIR6W-1PS-48VDC-R01 | 96 |
| PIR6W-1PS-48VDC-T | 97 |
| PIR6W-1PS-60VDC-C | 97 |
| PIR6W-1PS-60VDC-O | 97 |
| PIR6W-1PS-60VDC-R | 96 |
| PIR6W-1PS-60VDC-R01 | 96 |
| PIR6W-1PS-60VDC-T | 97 |
| PIR6W-1PS-6VDC-C | 97 |
| PIR6W-1PS-6VDC-O | 97 |
| PIR6W-1PS-6VDC-R | 96 |
| PIR6W-1PS-6VDC-R01 | 96 |
| PIR6W-1PS-6VDC-T | 97 |
| PIR6WB-1PS-115VAC/DC-C | 101 |
| PIR6WB-1PS-115VAC/DC-O | 101 |
| **PIR6WB-1PS-115VAC/DC-R** | 100 |
| PIR6WB-1PS-115VAC/DC-R01 | 100 |
| PIR6WB-1PS-115VAC/DC-T | 101 |
| PIR6WB-1PS-12VDC-C | 101 |
| PIR6WB-1PS-12VDC-O | 101 |
| PIR6WB-1PS-12VDC-R | 100 |
| PIR6WB-1PS-12VDC-R01 | 100 |
| PIR6WB-1PS-12VDC-T | 101 |
| PIR6WB-1PS-230VAC/DC-C | 101 |
| PIR6WB-1PS-230VAC/DC-O | 101 |
| PIR6WB-1PS-230VAC/DC-R | 100 |
| PIR6WB-1PS-230VAC/DC-R01 | 100 |
| **PIR6WB-1PS-24VAC/DC-C** | 101 |
| **PIR6WB-1PS-24VAC/DC-O** | 101 |
| **PIR6WB-1PS-24VAC/DC-R** | 100 |
| **PIR6WB-1PS-24VAC/DC-R01** | 100 |
| **PIR6WB-1PS-24VAC/DC-T** | 101 |
| PIR6WB-1PS-24VDC-C | 101 |
| PIR6WB-1PS-24VDC-O | 101 |
| **PIR6WB-1PS-24VDC-R** | 100 |
| PIR6WB-1PS-24VDC-R01 | 100 |
| PIR6WB-1PS-24VDC-T | 101 |
| PIR6WB-1PS-36VDC-C | 101 |
| PIR6WB-1PS-36VDC-O | 101 |
| PIR6WB-1PS-36VDC-R | 100 |
| PIR6WB-1PS-36VDC-R01 | 100 |
| PIR6WB-1PS-36VDC-T | 101 |
| PIR6WB-1PS-42VAC/DC-C | 101 |
| PIR6WB-1PS-42VAC/DC-O | 101 |
| PIR6WB-1PS-42VAC/DC-R | 100 |
| PIR6WB-1PS-42VAC/DC-R01 | 100 |
| PIR6WB-1PS-42VAC/DC-T | 101 |
| PIR6WB-1PS-48VDC-C | 101 |
| PIR6WB-1PS-48VDC-O | 101 |
| PIR6WB-1PS-48VDC-R | 100 |
| PIR6WB-1PS-48VDC-R01 | 100 |
| PIR6WB-1PS-48VDC-T | 101 |

| Part No. | Pg. |
|---|---|
| PIR6WB-1PS-60VDC-C | 101 |
| PIR6WB-1PS-60VDC-O | 101 |
| PIR6WB-1PS-60VDC-R | 100 |
| PIR6WB-1PS-60VDC-R01 | 100 |
| PIR6WB-1PS-60VDC-T | 101 |
| PIR6WB-1PS-6VDC-C | 101 |
| PIR6WB-1PS-6VDC-O | 101 |
| PIR6WB-1PS-6VDC-R | 100 |
| PIR6WB-1PS-6VDC-R01 | 100 |
| PIR6WB-1PS-6VDC-T | 101 |
| PZ11 | 70 |
| PZ8 | 69 |
| R15-1014-23-1012 | 68 |
| R15-1014-23-1012-D | 68 |
| R15-1014-23-1012-K | 68 |
| R15-1014-23-1012-L | 68 |
| R15-1014-23-1024 | 68 |
| R15-1014-23-1024-D | 68 |
| R15-1014-23-1024-K | 68 |
| **R15-1014-23-1024-L** | 68 |
| R15-1014-23-1110 | 68 |
| R15-1014-23-1110-D | 68 |
| R15-1014-23-1110-K | 68 |
| R15-1014-23-1110-L | 68 |
| R15-1014-23-3024 | 68 |
| R15-1014-23-3024-D | 68 |
| R15-1014-23-3024-K | 68 |
| R15-1014-23-3024-L | 68 |
| R15-1014-23-3120 | 68 |
| R15-1014-23-3120-D | 68 |
| R15-1014-23-3120-K | 68 |
| R15-1014-23-3120-L | 68 |
| R15-1014-23-3230 | 68 |
| R15-1014-23-3230-D | 68 |
| R15-1014-23-3230-K | 68 |
| R15-1014-23-3230-L | 68 |
| R15-1014-23-6120 | 68 |
| R15-1014-23-6120-D | 68 |
| R15-1014-23-6120-K | 68 |
| **R15-1014-23-6120-L** | 68 |
| R15-1014-23-6230 | 68 |
| R15-1014-23-6230-D | 68 |
| R15-1014-23-6230-K | 68 |
| R15-1014-23-6230-L | 68 |
| **R15-2012-23-1012** | 68 |
| R15-2012-23-1012-WT | 68 |
| R15-2012-23-1012-WTL | 68 |
| **R15-2012-23-1024** | 68 |
| R15-2012-23-1024-WT | 68 |
| **R15-2012-23-1024-WTL** | 68 |
| R15-2012-23-1110 | 68 |
| R15-2012-23-1110-WT | 68 |
| R15-2012-23-1110-WTL | 68 |
| **R15-2012-23-5024** | 68 |
| R15-2012-23-5024-WT | 68 |
| R15-2012-23-5024-WTL | 68 |
| **R15-2012-23-5120** | 68 |
| R15-2012-23-5120-WT | 68 |
| **R15-2012-23-5120-WTL** | 68 |
| **R15-2012-23-5230** | 68 |
| R15-2012-23-5230-WT | 68 |
| R15-2012-23-5230-WTL | 68 |
| **R15-2013-23-1012** | 68 |
| R15-2013-23-1012-WT | 68 |
| R15-2013-23-1012-WTL | 68 |
| **R15-2013-23-1024** | 68 |
| R15-2013-23-1024-WT | 68 |
| **R15-2013-23-1024-WTL** | 68 |
| R15-2013-23-1110 | 68 |
| R15-2013-23-1110-WT | 68 |
| R15-2013-23-1110-WTL | 68 |
| **R15-2013-23-5024** | 68 |
| R15-2013-23-5024-WT | 68 |
| R15-2013-23-5024-WTL | 68 |


**BOLD - Regular stocked items.**




DATA SUBJECT TO CHANGE WITHOUT NOTICE

# INDEX


| Part No. | Pg. |
|---|---|
| **R15-2013-23-5120** | 68 |
| R15-2013-23-5120-WT | 68 |
| **R15-2013-23-5120-WTL** | 68 |
| **R15-2013-23-5230** | 68 |
| R15-2013-23-5230-WT | 68 |
| R15-2013-23-5230-WTL | 68 |
| R2M-2012-23-1012 | 62 |
| **R2M-2012-23-1024** | 62 |
| R2M-2012-23-1110 | 62 |
| **R2M-2012-23-5120** | 62 |
| R2M-2012-23-5230 | 62 |
| R2N-2012-23-1012-WT | 54 |
| **R2N-2012-23-1012-WTL** | 54 |
| **R2N-2012-23-1024-WT** | 54 |
| **R2N-2012-23-1024-WTL** | 54 |
| R2N-2012-23-1110-WT | 54 |
| R2N-2012-23-1110-WTL | 54 |
| R2N-2012-23-5024-WT | 54 |
| **R2N-2012-23-5024-WTL** | 54 |
| **R2N-2012-23-5120-WT** | 54 |
| **R2N-2012-23-5120-WTL** | 54 |
| R2N-2012-23-5230-WT | 54 |
| **R2N-2012-23-5230-WTL** | 54 |
| R3N-2013-23-1012-WT | 54 |
| **R3N-2013-23-1012-WTL** | 54 |
| R3N-2013-23-1024-WT | 54 |
| **R3N-2013-23-1024-WTL** | 54 |
| R3N-2013-23-1110-WT | 54 |
| R3N-2013-23-1110-WTL | 54 |
| R3N-2013-23-5024-WT | 54 |
| R3N-2013-23-5024-WTL | 54 |
| **R3N-2013-23-5120-WT** | 54 |
| **R3N-2013-23-5120-WTL** | 54 |
| R3N-2013-23-5230-WT | 54 |
| R3N-2013-23-5230-WTL | 54 |
| R4N-2014-23-1012-WT | 54 |
| **R4N-2014-23-1012-WTL** | 54 |
| **R4N-2014-23-1024-WT** | 54 |
| **R4N-2014-23-1024-WTL** | 54 |
| R4N-2014-23-1110-WT | 54 |
| **R4N-2014-23-1110-WTL** | 54 |
| R4N-2014-23-5024-WT | 54 |
| **R4N-2014-23-5024-WTL** | 54 |
| **R4N-2014-23-5120-WT** | 54 |
| **R4N-2014-23-5120-WTL** | 54 |
| R4N-2014-23-5230-WT | 54 |
| **R4N-2014-23-5230-WTL** | 54 |
| RM40-2011-85-1003 | 75 |
| RM40-2011-85-1005 | 75 |
| RM40-2011-85-1006 | 75 |
| RM40-2011-85-1009 | 75 |
| RM40-2011-85-1012 | 75 |
| RM40-2011-85-1024 | 75 |
| RM40-2011-85-1048 | 75 |
| RM40-3021-85-1003 | 75 |
| RM40-3021-85-1005 | 75 |
| RM40-3021-85-1006 | 75 |
| RM40-3021-85-1009 | 75 |
| RM40-3021-85-1012 | 75 |
| RM40-3021-85-1024 | 75 |
| RM40-3021-85-1048 | 75 |
| RM50-3011-85-1003 | 75 |
| RM50-3011-85-1005 | 75 |
| RM50-3011-85-1006 | 75 |
| RM50-3011-85-1009 | 75 |
| RM50-3011-85-1012 | 75 |
| RM50-3011-85-1018 | 75 |
| RM50-3011-85-1024 | 75 |
| RM50-3011-85-1048 | 75 |
| RM50-3021-85-1003 | 75 |
| RM50-3021-85-1005 | 75 |
| RM50-3021-85-1006 | 75 |
| RM50-3021-85-1009 | 75 |
| RM50-3021-85-1012 | 75 |
| RM50-3021-85-1018 | 75 |
| RM50-3021-85-1024 | 75 |
| RM50-3021-85-1048 | 75 |
| RM50-3021-85-1060 | 75 |
| **RM699BV-3011-85-1005** | 88 |
| **RM699BV-3011-85-1012** | 88 |
| **RM699BV-3011-85-1024** | 88 |
| **RM699BV-3011-85-1048** | 88 |
| **RM699BV-3011-85-1060** | 88 |
| RM699BV-3211-85-1005 | 88 |
| RM699BV-3211-85-1012 | 88 |
| RM699BV-3211-85-1024 | 88 |
| RM699BV-3211-85-1048 | 88 |
| RM699BV-3211-85-1060 | 88 |
| **RM84-2012-35-1012** | 80 |
| **RM84-2012-35-1024** | 80 |
| RM84-2012-35-1110 | 80 |
| **RM84-2012-35-5120** | 80 |
| **RM84-2012-35-5230** | 80 |
| **RM84-2022-35-1012** | 80 |
| **RM84-2022-35-1024** | 80 |
| RM84-2022-35-1110 | 80 |
| **RM84-2022-35-5120** | 80 |
| **RM84-2022-35-5230** | 80 |
| **RM85-2011-35-1012** | 80 |
| **RM85-2011-35-1024** | 80 |
| RM85-2011-35-1110 | 80 |
| **RM85-2011-35-5120** | 80 |
| **RM85-2011-35-5230** | 80 |
| **RM85-2021-35-1012** | 80 |
| **RM85-2021-35-1024** | 80 |
| RM85-2021-35-1110 | 80 |
| **RM85-2021-35-5120** | 80 |
| **RM85-2021-35-5230** | 80 |
| **RM87N-2011-35-1012** | 80 |
| **RM87N-2011-35-1024** | 80 |
| RM87N-2011-35-1110 | 80 |
| **RM87N-2011-35-5120** | 80 |
| **RM87N-2011-35-5230** | 80 |
| **RM87N-2021-35-1012** | 80 |
| **RM87N-2021-35-1024** | 80 |
| RM87N-2021-35-1110 | 80 |
| **RM87N-2021-35-5120** | 80 |
| **RM87N-2021-35-5230** | 80 |
| RS35-3022-25-1012 | 103 |
| RS35-3022-25-1024 | 103 |
| RS35-3022-25-1110 | 103 |
| RS50-3022-25-1012 | 103 |
| RS50-3022-25-1024 | 103 |
| RS50-3022-25-1110 | 103 |
| **RSR30-D05-A1-24-020-1** | 84 |
| **RSR30-D05-D1-02-040-1** | 86 |
| **RSR30-D05-D1-04-025-1** | 85 |
| **RSR30-D05-D1-24-010-1** | 87 |
| **RSR30-D12-A1-24-020-1** | 84 |
| **RSR30-D12-D1-02-040-1** | 86 |
| **RSR30-D12-D1-04-025-1** | 85 |
| **RSR30-D12-D1-24-010-1** | 87 |
| **RSR30-D24-A1-24-020-1** | 84 |
| **RSR30-D24-D1-02-040-1** | 86 |
| **RSR30-D24-D1-04-025-1** | 85 |
| **RSR30-D24-D1-24-010-1** | 87 |
| **RSR30-D48-D1-02-040-1** | 86 |
| **RSR30-D48-D1-04-025-1** | 85 |
| **RSR30-D48-D1-24-010-1** | 87 |
| **RUC-2012-26-1012** | 62 |
| RUC-2012-26-1012-K | 62 |
| RUC-2012-26-1012-KL | 62 |
| RUC-2012-26-1012-L | 62 |
| **RUC-2012-26-1024** | 62 |
| RUC-2012-26-1024-K | 62 |
| **RUC-2012-26-1024-KL** | 62 |
| RUC-2012-26-1024-L | 62 |
| RUC-2012-26-1110 | 62 |
| RUC-2012-26-1110-K | 62 |
| RUC-2012-26-1110-KL | 62 |
| RUC-2012-26-1110-L | 62 |
| **RUC-2012-26-5120** | 62 |
| RUC-2012-26-5120-K | 62 |
| **RUC-2012-26-5120-KL** | 62 |
| RUC-2012-26-5120-L | 62 |
| RUC-2012-26-5230 | 62 |
| RUC-2012-26-5230-K | 62 |
| **RUC-2012-26-5230-KL** | 62 |
| RUC-2012-26-5230-L | 62 |
| **RUC-2013-26-1012** | 63 |
| RUC-2013-26-1012-K | 63 |
| RUC-2013-26-1012-KL | 63 |
| RUC-2013-26-1012-L | 63 |
| **RUC-2013-26-1024** | 63 |
| RUC-2013-26-1024-K | 63 |
| **RUC-2013-26-1024-KL** | 63 |
| RUC-2013-26-1024-L | 63 |
| RUC-2013-26-1110 | 63 |
| RUC-2013-26-1110-K | 63 |
| RUC-2013-26-1110-KL | 63 |
| RUC-2013-26-1110-L | 63 |
| **RUC-2013-26-5120** | 63 |
| RUC-2013-26-5120-K | 63 |
| **RUC-2013-26-5120-KL** | 63 |
| RUC-2013-26-5120-L | 63 |
| **RUC-2013-26-5230** | 63 |
| RUC-2013-26-5230-K | 63 |
| RUC-2013-26-5230-KL | 63 |
| RUC-2013-26-5230-L | 63 |
| RUC-2022-26-1012 | 63 |
| RUC-2022-26-1012-K | 63 |
| RUC-2022-26-1012-KL | 63 |
| RUC-2022-26-1012-L | 63 |
| RUC-2022-26-1024 | 63 |
| RUC-2022-26-1024-K | 63 |
| RUC-2022-26-1024-KL | 63 |
| RUC-2022-26-1024-L | 63 |
| RUC-2022-26-1110 | 63 |
| RUC-2022-26-1110-K | 63 |
| RUC-2022-26-1110-KL | 63 |
| RUC-2022-26-1110-L | 63 |
| RUC-2022-26-5120 | 63 |
| RUC-2022-26-5120-K | 63 |
| RUC-2022-26-5120-KL | 63 |
| RUC-2022-26-5120-L | 63 |
| RUC-2022-26-5230 | 63 |
| RUC-2022-26-5230-K | 63 |
| RUC-2022-26-5230-KL | 63 |
| RUC-2022-26-5230-L | 63 |
| RUC-2023-26-1012 | 63 |
| RUC-2023-26-1012-K | 63 |
| RUC-2023-26-1012-KL | 63 |
| RUC-2023-26-1012-L | 63 |
| RUC-2023-26-1024 | 63 |
| RUC-2023-26-1024-K | 63 |
| RUC-2023-26-1024-KL | 63 |
| RUC-2023-26-1024-L | 63 |
| RUC-2023-26-1110 | 63 |
| RUC-2023-26-1110-K | 63 |
| RUC-2023-26-1110-KL | 63 |
| RUC-2023-26-1110-L | 63 |
| RUC-2023-26-5120 | 63 |
| RUC-2023-26-5120-K | 63 |
| RUC-2023-26-5120-KL | 63 |
| RUC-2023-26-5120-L | 63 |
| RUC-2023-26-5230 | 63 |
| RUC-2023-26-5230-K | 63 |
| RUC-2023-26-5230-KL | 63 |
| RUC-2023-26-5230-L | 63 |
| RUC-2052-26-1012 | 64 |
| RUC-2052-26-1012-K | 64 |
| RUC-2052-26-1012-KL | 64 |
| RUC-2052-26-1012-L | 64 |
| RUC-2052-26-1024 | 64 |
| RUC-2052-26-1024-K | 64 |
| RUC-2052-26-1024-KL | 64 |
| RUC-2052-26-1024-L | 64 |
| RUC-2052-26-1110 | 64 |
| RUC-2052-26-1110-K | 64 |
| RUC-2052-26-1110-KL | 64 |
| RUC-2052-26-1110-L | 64 |
| RUC-2052-26-5120 | 64 |
| RUC-2052-26-5120-K | 64 |
| RUC-2052-26-5120-KL | 64 |
| RUC-2052-26-5120-L | 64 |
| RUC-2052-26-5230 | 64 |
| RUC-2052-26-5230-K | 64 |
| RUC-2052-26-5230-KL | 64 |
| RUC-2052-26-5230-L | 64 |
| RUC-2053-26-1012 | 64 |
| RUC-2053-26-1012-K | 64 |
| RUC-2053-26-1012-KL | 64 |
| RUC-2053-26-1012-L | 64 |
| RUC-2053-26-1024 | 64 |
| RUC-2053-26-1024-K | 64 |
| RUC-2053-26-1024-KL | 64 |
| RUC-2053-26-1024-L | 64 |
| RUC-2053-26-1110 | 64 |
| RUC-2053-26-1110-K | 64 |
| RUC-2053-26-1110-KL | 64 |
| RUC-2053-26-1110-L | 64 |
| RUC-2053-26-5120 | 64 |
| RUC-2053-26-5120-K | 64 |
| RUC-2053-26-5120-KL | 64 |
| RUC-2053-26-5120-L | 64 |
| RUC-2053-26-5230 | 64 |
| RUC-2053-26-5230-K | 64 |
| RUC-2053-26-5230-KL | 64 |
| RUC-2053-26-5230-L | 64 |
| **RY2-2012-26-1012** | 62 |
| RY2-2012-26-1012-D | 62 |
| RY2-2012-26-1012-L | 62 |
| RY2-2012-26-1012-LD | 62 |
| **RY2-2012-26-1024** | 62 |
| RY2-2012-26-1024-D | 62 |
| **RY2-2012-26-1024-L** | 62 |
| RY2-2012-26-1024-LD | 62 |
| RY2-2012-26-1110 | 62 |
| RY2-2012-26-1110-D | 62 |
| RY2-2012-26-1110-L | 62 |
| RY2-2012-26-1110-LD | 62 |
| RY2-2012-26-5024 | 62 |
| RY2-2012-26-5024-D | 62 |
| **RY2-2012-26-5024-L** | 62 |
| RY2-2012-26-5024-LD | 62 |
| **RY2-2012-26-5120** | 62 |
| RY2-2012-26-5120-D | 62 |
| **RY2-2012-26-5120-L** | 62 |
| RY2-2012-26-5120-LD | 62 |
| RY2-2012-26-5230 | 62 |
| RY2-2012-26-5230-D | 62 |
| **RY2-2012-26-5230-L** | 62 |
| RY2-2012-26-5230-LD | 62 |


**BOLD** - **Regular stocked items.**




DATA SUBJECT TO CHANGE WITHOUT NOTICE

# STANDARD TERMS AND CONDITIONS OF SALE

**TITLE** - Title to the products of ALTECH shall remain with ALTECH until payment is made in full by Customer. Such reservation of title is for the purpose of securing the purchase price and shall not relieve Customer of the duty to inspect the products upon receipt, to notify ALTECH of any deficiencies or defects, and to exercise due care in the use, installation, operation, and maintenance of the products when on the premise of the Customer or under the control of the Customer. Notwithstanding any reservation of title by ALTECH, risk of loss shall pass to customer at any time of shipment.

**SHIPMENT AND DELIVERY** - All orders for destination in the mainland United States (less Hawaii, Alaska and non-continental United States possessions) will be shipped F.O.B. Flemington, N.J. All destination, shipping and other charges shall be paid by the Customer in accordance with ALTECH's then current shipping and billing practices.

Delivery dates given in the acceptance of any order are approximate. ALTECH shall not be liable for delays in delivery or in performance due to causes beyond its reasonable control including acts of God, acts of Customer, acts of civil or military authority, fires, strikes or other labor disturbances, war, riot or delays in transportation. In the event of such delay, the date of delivery or performance shall be extended for a period equal to the time lost by reason of the delay.

**PRICE** - PRICES in any ALTECH publication are subject to change without prior notification. Catalog prices are based on prices published in the current price list. All written quotations are valid for thirty (30) days from the date of quotation. Customer shall pay all sales, use, excise or similar taxes whenever ALTECH must itself pay and/or collect such tax from Customer arising out of the sale.

**PAYMENT** - Customer agrees to make payment within thirty (30) days of date of the invoice from ALTECH. Customer agrees to pay a late payment charge of one and one-half percent (1.5% per month, or the maximum late payment charge permitted by applicable law, whichever is less, on any unpaid amount for each calendar month (or fraction thereof) that such payment is in default. Orders amounting to less than $100.00 will be billed at $100.00 plus freight. Full carton purchases are required. In the event of referral to an attorney for collection, reasonable attorney's fees for collection of the overdue amount shall be paid by Customer. In the event payment is not received within 30 days from the date of invoice, any discount shall be cancelled and the full list price will be due.

**LIMITED WARRANTY** - ALTECH warrants to Customer that the equipment purchases shall be free from defects in material and workmanship under normal use and service for a period of one year from shipment.

Written notice as an explanation of the circumstances of any claim that the equipment has proved defective in material or workmanship shall be given promptly by the Customer to ALTECH.

ALTECH will not be liable for any misuse, improper operations, improper installation, improper maintenance, alteration, modification, accident or unusual degradation of the equipment or parts due to an unsuitable installation environment.

No representation of other affirmation of facts, including but not limited to statements regarding capacity, suitability for use or performance of the equipment, shall be or be deemed to be a warranty or representation by ALTECH for any purpose, nor give rise to any liability or obligation of ALTECH whatsoever.

Customer's sole and exclusive remedy in the event of breach of warranty, as set forth herein, is expressly limited to (1) the correction of the defect by adjustment, repair, modification, or replacement, or (2) issuance of a credit or refund of the purchase price for the defective equipment at ALTECH's election and sole expense.

EXCEPT AS SPECIFICALLY PROVIDED IN THIS AGREEMENT, THERE ARE NO OTHER WARRANTIES EXPRESSED OR IMPLIED INCLUDING BUT NOT LIMITED TO ANY IMPLIED WARRANTIES OR MERCHANTABILITY OR FITNESS FOR A PARTICULAR PURPOSE.

THIS WARRANTY EXTENDS ONLY TO THE CUSTOMER FROM ALTECH OR ITS AUTHORIZED DISTRIBUTOR.

**LIMITATION OF LIABILITY** - IN NO EVENT, SHALL ALTECH BE LIABLE FOR LOSS OF PROFITS, INDIRECT, SPECIAL, CONSEQUENTIAL OR OTHER SIMILAR DAMAGES ARISING OUT OF ANY BREACH OF THIS AGREEMENT OR OBLIGATIONS UNDER THE AGREEMENT.

ALTECH SHALL NOT BE LIABLE FOR ANY DAMAGES CAUSED BY DELAY IN SHIPMENT, INSTALLATION OR FURNISHING OF EQUIPMENT OR SERVICES UNDER THIS AGREEMENT.

No action arising out of any claimed breach of this Agreement may be brought by either party more than two (2) years after the cause of action has accrued.

**PATENT INDEMNITY** - ALTECH shall defend or settle any suit or proceeding brought against Customer based on a claim that any equipment made to ALTECH design and furnished hereunder constitutes an infringement of any existing United States patent, provided (ALTECH) is notified promptly in writing and is given complete authorization and information required for the defense, and ALTECH shall pay all damages and costs awarded against Customer, but shall not be responsible for any costs, expense or compromise incurred or made by Customer without ALTECH's prior written consent. If any equipment is in ALTECH's opinion likely to or does become the subject of a claim for patent infringement, ALTECH may at its option and expense procure for Customer the right to continue using the device, modify it to become non-infringing, but in the event ALTECH is not reasonably able to modify, substitute, or otherwise procure for Customer the right to continue using it, ALTECH will remove such equipment and refund to Customer the amount paid in excess of a reasonable rental for past use.

ALTECH shall not be liable for any infringement or claim based upon use of the equipment in combination with other equipment not supplied by ALTECH or with modifications made by Customer.

The foregoing states the entire liability of ALTECH to Customer arising from patent infringement.

**SELLER'S REMEDIES** - Should Customer fail to make any payment within ten (10) days of its due date, or fail to perform any other of the Customer's obligation hereunder upon thirty (30) days written notice, or should Customer be or become insolvent or be a party to any bankruptcy receivership proceeding prior to full payment of all amounts payable hereunder, ALTECH may: (a) with or without demand or notice to customer declare the entire amount unpaid immediately due and payable; (b) enter upon the premises where the equipment may be found and remove it (Customer shall assemble the equipment and make it available to ALTECH at a place reasonably convenient to both parties and shall permit and assist ALTECH in effecting the retaking and removal of the equipment); and (c) sell any or all the equipment as permitted under applicable law, applying the proceeds of the sale to payment of the expenses of retaking, repairing and selling the equipment, reasonable attorney fees and to the satisfaction of all indebtedness then due and unpaid under this Agreement. Any surplus shall be paid to Customer and any deficiency shall be paid to ALTECH by Customer.

The remedies provided herein shall be cumulative and in addition to all other remedies provided by law or equity or under the Uniform Commercial Code.

**GOVERNING LAW** - This agreement will be governed by the Laws of the State of New Jersey.

**GENERAL** - This Agreement shall only become effective and binding when either (a) it has been accepted and executed by an authorized representative of ALTECH, or (b) the equipment has been shipped to Customer, with or without acceptance in writing hereon. Notice of acceptance is hereby waived by Customer. Customer hereby acknowledges receipt of a true and complete copy hereof.

No addition to or modification of any of the Terms and Conditions of Sale as they appear herein shall be binding upon ALTECH unless signed in writing by duly authorized representative of ALTECH in Flemington, N.J.

Typographical and clerical errors in quotations, orders and acknowledgments are subject to correction.

This Agreement is not assignable without the prior written consent of ALTECH. Any attempt to assign any of the rights, duties or obligations of this Agreement without such consent is void.

If any provision or provisions of this Agreement shall be held to be invalid, illegal or unenforceable, the validity, legality and enforceability, of the remaining provisions shall not in any way be affected or impaired thereby.

ALTECH is not responsible for failure to fulfill its obligation under this Agreement due to causes beyond its control, or except as agreed herein.

THE CUSTOMER ACKNOWLEDGES THAT HE HAS READ THE AGREEMENT, UNDERSTANDS IT, AND AGREES TO BE BOUND BY ITS TERMS AND CONDITIONS. FURTHERMORE, THE CUSTOMER AGREES THAT IT IS THE COMPLETE AND EXCLUSIVE STATEMENT OF THE AGREEMENT BETWEEN THE PARTIES, WHICH SUPERSEDES ALL PROPOSALS OR PRIOR AGREEMENTS, ORAL OR WRITTEN, EXPRESSED OR IMPLIED, AND ALL OTHER COMMUNICATIONS BETWEEN THE PARTIES RELATING TO THE SUBJECT MATTER OF THIS AGREEMENT.

# HERE ARE OTHER GREAT PRODUCTS AVAILABLE FROM ALTECH

Altech®

### *Circuit Protection Devices*

Altech the market leader in UL508 Manual Motor Controllers/ Miniature Circuit Breakers now introduces UL489 Miniature Circuit Breakers and UL1077 Supplementary Protectors. The UL489 versions are DIN rail mounted, 17.5mm wide, thermal magnetic, 240V, 480Y/277V AC, 50/60Hz, 125 and 250 VDC models, with short circuit interrupt capacity of 10kA, a positive trip indicator, and are line/load reversible. The UL1077 versions are DIN rail mounted, 17.5mm wide, thermal magnetic, 480Y/277V AC, 50/60Hz, a short circuit withstand capacity 10kA, have a positive trip indicator.

**Altech Corp.®**
35 Royal Rd., Flemington, NJ 08822
908-806-9400
FAX 908-806-9490
www.altechcorp.com

### *Metallic Push Buttons and Selector Switches*

Altech 22 and 30 mm Push Buttons offer ideal cost-effective solutions for control circuits utilizing both direct and remote management applications. Ease of assembly has been engineered into the design; the only tool necessary for installation is a screwdriver.

- LED Indicating Devices
- Pilot Lights
- Push Button Stations
- Push Button Enclosures
- UL Recognized
- Custom Push Button Assemblies
- All Very Competitively Priced

**Altech Corp.®**
35 Royal Rd., Flemington, NJ 08822
908-806-9400
FAX 908-806-9490
www.altechcorp.com

### *Contactors and More!*

Altech's now carries contactors, mini contactors, definite purpose contactors & overload relays. The contactors come in 3 and 4 pole configurations at 9A to 800A. Available in Single Phase (115 -230V) and Three Phase (200 - 575V) AC and DC models. A large variety of coil voltages are supported and the accessories are auxiliary contacts and overload relays. The mini contactors come in screw clamp, fast-on, cage clamp and solder pin types.

**Altech Corp.®**
35 Royal Rd., Flemington, NJ 08822
908-806-9400
www.altechcorp.com

### *Terminal Blocks*

Altech offers a NEW Terminal Block catalog with the most competitively priced blocks in the industry. We feature screw and spring clamp models for DIN rail and panel mount applications. This advanced line of wire termination products will increase your design options and help to get the job done more efficiently. Our line of blocks include feed-through (single, double or triple level), distribution, ground, fuse, disconnect, thermocouple, surge suppressor and indicator. A wide variety of accessories, tools and ferrules are available.

**Altech Corp.®**
35 Royal Rd., Flemington, NJ 08822
908-806-9400
FAX 908-806-9490
www.altechcorp.com

### *Industrial Enclosures*

Altech's expanded line of TK Industrial Enclosures, with metric knockouts, is here. Now our entire line of industrial enclosures is in metric. Metric knockouts align with international standards making selection easier and more universal. Plus the PG standard is still available. All of Altech's enclosures are internationally accepted and stand up to the harshest environments. They protect against dust, water and corrosion while enhancing the value of your product. Rated up to IP66 (NEMA type 4x), Altech enclosures are available in a wide range of sizes.

**Altech Corp.®**
35 Royal Rd., Flemington, NJ 08822
908-806-9400
www.altechcorp.com

### *DIN Rail Power Supplies*

Altech DIN RAIL mountable power supplies have Universal AC input. They are suitable for industrial and automation applications.

- UL508 Listed
- Installed on DIN rail TS35/ 7.5 or 15
- Available from 20-960W
- Protections: Short circuit / Overload / Over-voltage / Over temperature
- Cooling by free air convection
- Worldwide approvals
- 3 year warranty

**Altech Corp.®**
35 Royal Rd., Flemington, NJ 08822
908-806-9400
FAX 908-806-9490
www.altechcorp.com



DATA SUBJECT TO CHANGE WITHOUT NOTICE

# altechcorp.com

Altech Corporation
35 Royal Road
Flemington, NJ 08822-6000
P 908.806.9400 • F 908.806.9490
www.altechcorp.com



Altech Corp.® 410-112013-5M
**Printed November 2013**