FCI P/N	DIM"L"(METERS)	AWG
10125823-4010LF	1.0	26
10125823-4018LF	1.8	26
10125823-4020LF	2.0	26
10125823-4030LF	3.0	26
10125823-4050LF	5.0	26

B

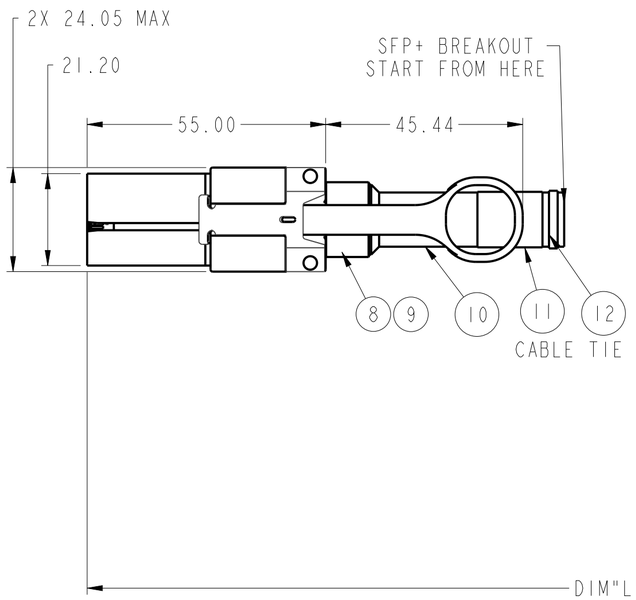

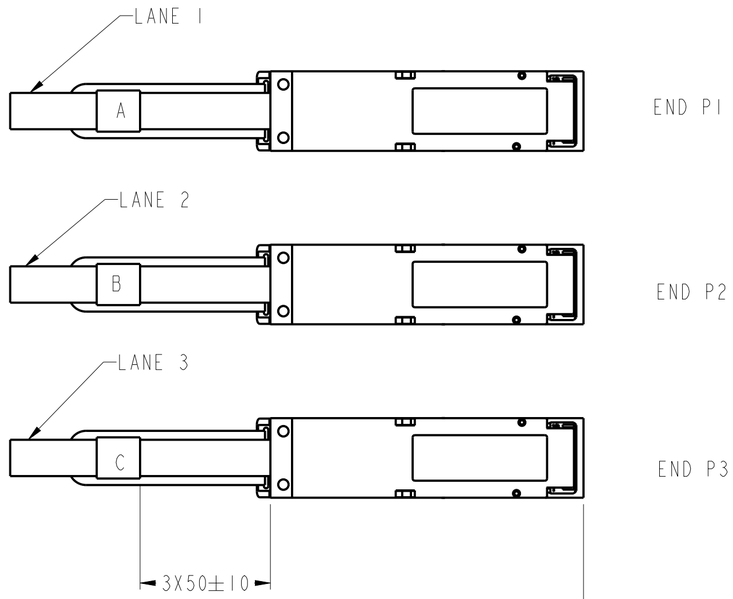

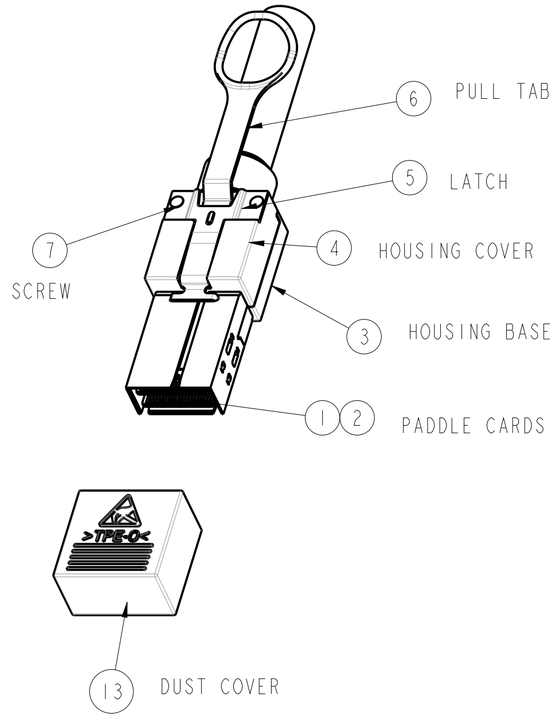

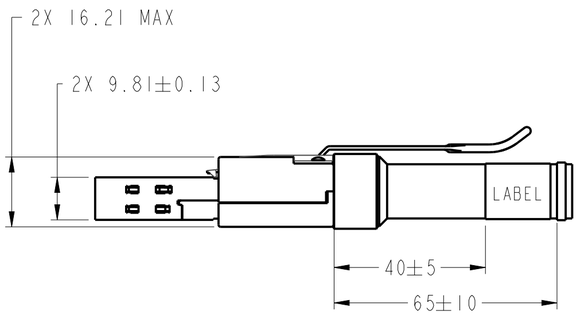

END P4
CABLE CONNECTOR
CXP (PASSIVE) PLUG

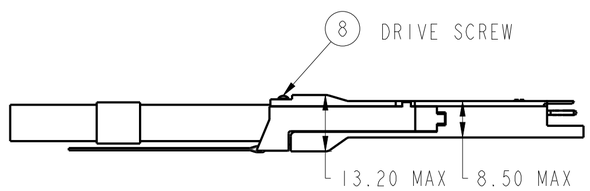

END P1-P3
CABLE CONNECTOR
QSFP+ (PASSIVE) PLUG

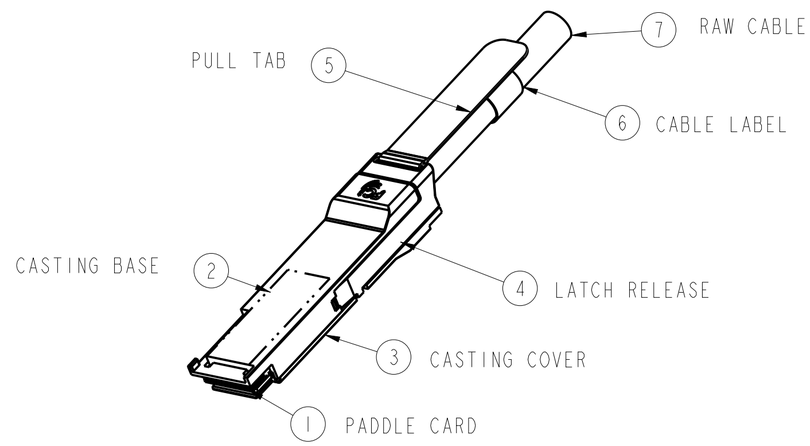

spec ref -			dr	Ya Li	2015/04/22	projection	MM
tolerance std ASME Y14.5 -	TOLERANCES UNLESS OTHERWISE SPECIFIED		eng	Shawn Xu	2017/04/27		size A2 / scale 1:2
			chr	-	-		ecn no ELX-N-26836-1
			appr	Michael Zhou	2017/04/28	product family -	rel level Released
surface - ASME Y14.5	linear	0.X	±Y	Amphenol FCi	title FINAL ASSEMBLY - 10Gb/s CXP TO 3x QSFP+ PASSIVE CABLE	dwg no 10125823	rev B
		0.XX	±Y				
		0.XXX	±Y				
	angular	0°	±Y°	www.fci.com	cat. no. -	Product - Customer Drw	sheet 1 of 4

Amphenol FCi

© 2016 AFCi

Creo File - REV E - 2016-02-12

FCI P/N	DIM"L"(METERS)	AWG
10125823-4010LF	1.0	26
10125823-4018LF	1.8	26
10125823-4020LF	2.0	26
10125823-4030LF	3.0	26
10125823-4050LF	5.0	26

B

BOM LIST FOR P4 CXP PASSIVE CABLE

ITEM	DESCRIPTION	QTY	NOTES
1	RX PADDLE CARD	1	SEE TABLE 1
2	TX PADDLE CARD	1	SEE TABLE 1
3	HOUSING BASE	1	
4	HOUSING COVER	1	
5	LATCH	1	
6	PULL STRAP	1	
7	SCREW	2	
8	FERRULE	1	
9	SPLIT GROMMET	1	
10	HEAT SHRINK TUBE	A/R	
11	CABLE LABEL	1	SEE NOTES 5
12	CABLE TIE	1	
13	DUST CAP	1	

BOM LIST FOR P1-P3 QSFP+ PASSIVE CABLE

ITEM	DESCRIPTION	QTY	NOTES
1	QSFP+ PADDLE CARD	3	
2	CASTING BASE	3	
3	CASTING COVER	3	
4	LATCH RELEASE	3	
5	PULL TAB	3	
6	CABLE LABEL	3	
7	RAW CABLE	A/R	
8	DRIVE SCREW	6	
9	DUST CAP	3	NOT SHOWN
10	COLLAR	3	NOT SHOWN
11	SPRING	6	NOT SHOWN

© 2016 AFCI

spec ref -			dr Ya Li 2015/04/22	projection	MM	size A2	scale 1:2
tolerance std ASME Y14.5 -	TOLERANCES UNLESS OTHERWISE SPECIFIED		eng Shawn Xu 2017/04/27			ecn no ELX-N-26836-1	
			chr - -			rel level Released	
			appr Michael Zhou 2017/04/28	product family -			
surface - ASME Y14.5	linear	0.X ±Y	Amphenol FCi	title FINAL ASSEMBLY - 10Gb/s CXP TO 3x QSFP+ PASSIVE CABLE		dwg no 10125823	rev B
		0.XX ±Y					
		0.XXX ±Y					
	angular	0° ±Y°	www.fci.com	cat. no. -	Product - Customer Drw		sheet 2 of 4

FCI P/N	DIM"L"(METERS)	AWG
10125823-4010LF	1.0	26
10125823-4018LF	1.8	26
10125823-4020LF	2.0	26
10125823-4030LF	3.0	26
10125823-4050LF	5.0	26

B

PIN OUT CHART (WIRING) SEE NOTE 6

P4 CXP					P1 QSFP+		
PIN	F	SIGNAL	TYPE		PIN	F	SIGNAL
B1	L	GND	C	C	P19	L	GND
B2	S	Tx0p	----▷		P17	S	RX0p
B3	S	Tx0n	----▷		P18	S	RX0n
B4	L	GND	C	C	P16	L	GND
B5	S	Tx2p	----▷		P14	S	RX2p
B6	S	Tx2n	----▷		P15	S	RX2n
A7	L	GND	C	C	P20	L	GND
A2	S	Tx1p	----▷		P22	S	RX1p
A3	S	Tx1n	----▷		P21	S	RX1n
A4	L	GND	C	C	P23	L	GND
A5	S	Tx3p	----▷		P25	S	RX3p
A6	S	Tx3n	----▷		P24	S	RX3n
D1	L	GND	C	C	P38	L	GND
D2	S	Rx0p	◁----		P36	S	Tx0p
D3	S	Rx0n	◁----		P37	S	Tx0n
D4	L	GND	C	C	P35	L	GND
D5	S	Rx2p	◁----		P33	S	Tx2p
D6	S	Rx2n	◁----		P34	S	Tx0n
C1	L	GND	C	C	P1	L	GND
C2	S	RX1p	◁----		P3	S	Tx1p
C3	S	RX1n	◁----		P2	S	Tx0n
C4	L	GND	C	C	P4	L	GND
C5	S	RX3p	◁----		P5	S	Tx3p
C6	S	RX3n	◁----		P6	S	Tx3n

P4 CXP					P2 QSFP+		
PIN	F	SIGNAL	TYPE		PIN	F	SIGNAL
B7	L	GND	C	C	P19	L	GND
B8	S	Tx4p	----▷		P17	S	RX0p
B9	S	Tx4n	----▷		P18	S	RX0n
B10	L	GND	C	C	P16	L	GND
B11	S	Tx6p	----▷		P14	S	RX2p
B12	S	Tx6n	----▷		P15	S	RX2n
A7	L	GND	C	C	P20	L	GND
A8	S	Tx5p	----▷		P22	S	RX1p
A9	S	Tx5n	----▷		P21	S	RX1n
A10	L	GND	C	C	P23	L	GND
A11	S	Tx7p	----▷		P25	S	RX3p
A12	S	Tx7n	----▷		P24	S	RX3n
D7	L	GND	C	C	P38	L	GND
D8	S	Rx4p	◁----		P36	S	Tx0p
D9	S	Rx4n	◁----		P37	S	Tx0n
D10	L	GND	C	C	P35	L	GND
D11	S	Rx6p	◁----		P33	S	Tx2p
D12	S	Rx6n	◁----		P34	S	Tx0n
C7	L	GND	C	C	P1	L	GND
C8	S	RX5p	◁----		P3	S	Tx1p
C9	S	RX5n	◁----		P2	S	Tx0n
C10	L	GND	C	C	P4	L	GND
C11	S	RX7p	◁----		P5	S	Tx3p
C12	S	RX7n	◁----		P6	S	Tx3n

P4 CXP					P3 QSFP+		
PIN	F	SIGNAL	TYPE		PIN	F	SIGNAL
B13	L	GND	C	C	P19	L	GND
B14	S	Tx0p	----▷		P17	S	RX0p
B15	S	Tx0n	----▷		P18	S	RX0n
B16	L	GND	C	C	P16	L	GND
B17	S	Tx2p	----▷		P14	S	RX2p
B18	S	Tx2n	----▷		P15	S	RX2n
B19	L	GND	C	C	P13	L	GND
A13	L	GND	C	C	P20	L	GND
A14	S	Tx1p	----▷		P22	S	RX1p
A15	S	Tx1n	----▷		P21	S	RX1n
A16	L	GND	C	C	P23	L	GND
A17	S	Tx3p	----▷		P25	S	RX3p
A18	S	Tx3n	----▷		P24	S	RX3n
A19	L	GND	C	C	P26	L	GND
D13	L	GND	C	C	P38	L	GND
D14	S	Rx0p	◁----		P36	S	Tx0p
D15	S	Rx0n	◁----		P37	S	Tx0n
D16	L	GND	C	C	P35	L	GND
D17	S	Rx2p	◁----		P33	S	Tx2p
D18	S	Rx2n	◁----		P34	S	Tx0n
D19	L	GND	C	C	P32	L	GND
C13	L	GND	C	C	P1	L	GND
C14	S	RX1p	◁----		P3	S	Tx1p
C15	S	RX1n	◁----		P2	S	Tx0n
C16	L	GND	C	C	P4	L	GND
C17	S	RX3p	◁----		P5	S	Tx3p
C18	S	RX3n	◁----		P6	S	Tx3n
C19	L	GND	C	C	P7	L	GND

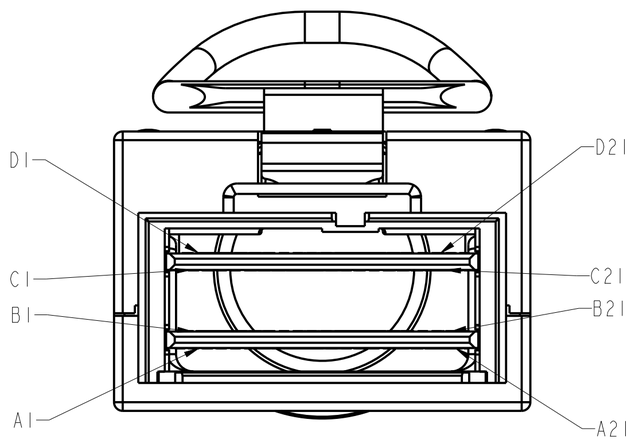

CXP PLUG
PIN ASSIGNMENTS
SCALE 4:1

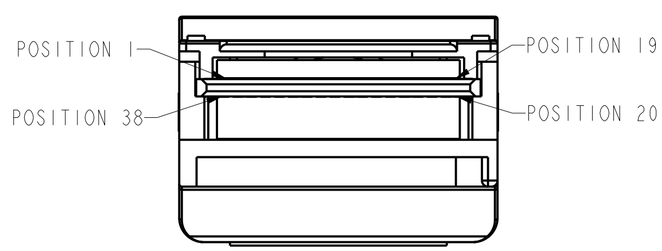

QSFP+ PLUG
PIN ASSIGNMENTS
SCALE 4:1

spec ref	-		
tolerance std	ASME Y14.5 -	TOLERANCES UNLESS OTHERWISE SPECIFIED	
surface	-	linear	0.X ±Y
			0.XX ±Y
			0.XXX ±Y
ASME Y14.5		angular	0° ±Y°

dr	Ya Li	2015/04/22
eng	Shawn Xu	2017/04/27
chr	-	-
appr	Michael Zhou	2017/04/28

projection | MM | size A2 | scale 1:1
ecn no ELX-N-26836-1
product family CXP CABLE | rel level Released

Amphenol FCi
title: FINAL ASSEMBLY - 10Gb/s
CXP TO 3x QSFP+ PASSIVE CABLE
dwg no 10125823 | rev B
www.fci.com | cat. no. - | Product - Customer Drw | sheet 3 of 4

© 2016 AFCI

FCI P/N	DIM"L"(METERS)	AWG
10125823-4010LF	1.0	26
10125823-4018LF	1.8	26
10125823-4020LF	2.0	26
10125823-4030LF	3.0	26
10125823-4050LF	5.0	26

B

NOTES:

1 - MATERIAL:
COVERS: ZINC ALLOY
PULL STRAP: ULTEM 1000B
LATCH COVER: STAINLESS STEEL
LATCH: STAINLESS STEEL
FERRULE: BRASS
LATCH PIN: STAINLESS STEEL
LOCTITE (EPOXY)
PADDLE CARD: PRINTED CIRCUIT SUBSTRATE - FR4
CABLE JACKETS TO BE CL2 RATED - UL94-V0
GROMMET: POLYURETHANE

2 - THIS PRODUCT MEETS THE RESTRICTION OF HAZARDOUS SUBSTANCES IN ELECTRICAL AND ELECTRONIC EQUIPMENT (RoHS) DIRECTIVE (2002/95/EC)

3 THIS DIMENSION IS A FINISHED PRODUCT LENGTH.

4 - UNLESS OTHERWISE SPECIFIED ASSEMBLED LENGTH TOLERANCE IS TO BE:
"DIM L" < 1 METER = ± 25mm
"DIM L" = 1 METER TO 10 METERS = ± 3% OF "DIM L"

5 - CONTENTS OF LABEL TO BE:
LABEL DETAILS:

FCI CHINA
FCI P/N
REVISION:02(FCI CUSTOMER DWG VERSION)
SN: CNYYWWCE ** * *####
(the first ** present cable length, eg:05--0.5m, 15--1.5m...)
(the 2nd * present cable wire guage, eg:2--30awg, 3--28awg...)
(the 3th * present L--lead free or H--halongen free .)
(the #### present serial number, eg: 0001, 0002...)

FONT SHALL BE CLEARLY VISIBLE AND BLACK IN COLOR.

6 - ALL CABLE ASSEMBLIES SHALL BE 100% TESTED FOR CONTINUITY AS DEFINED IN WIRING LIST.

7 - OTHER TESTING PERFORMED AS REQUIRED BY PRODUCT SPECIFICATION: GS-12-0943

8 - PACKAGING OF LEAD FREE PRODUCTS MEETS LABELING AND PACKAGING PER SPECIFICATION GS-14-920.
PACKAGE CABLE ASSEMBLIES PER GS-14-14-1272. DUST CAPS ARE TO BE ASSEMBLIED PRIOR TO PACKAGING.

9- IMPEDANCE: 100Ω DIFFERENTIAL.

10-THIS IS FOR 10G APPLICATION.

11-EEPROM PER FCI STANDARD PRODUCTION SPEC.CXP END PER GS-12-0943.SFP+ END PER GS-12-616.NOTICE VENDOR NAME SHOULD BE EVERTZ.

12- A "△" SYMBOL WILL BE NEXT TO ANY DIMENSION, VIEW, OR NOTE WHICH HAS BEEN MODIFIED WITH THE CURRENT DRAWING REVISION. THE CURRENT REVISION WILL BE SHOWN IN THE SYMBOL.

Amphenol FCi
© 2016 AFCI

spec ref	-			dr	Ya Li	2015/04/22	projection
tolerance std ASME Y14.5 -	TOLERANCES UNLESS OTHERWISE SPECIFIED			eng	Shawn Xu	2017/04/27	MM
				chr	-	-	
				appr	Michael Zhou	2017/04/28	product family: CXP CABLE
surface -	linear	0.X	±Y	title	FINAL ASSEMBLY - 10Gb/s CXP TO 3x QSFP+ PASSIVE CABLE		
		0.XX	±Y				
		0.XXX	±Y				
ASME Y14.5	angular	0°	±Y°	www.fci.com	cat. no. -	Product - Customer Drw	

size	A2
scale	1:1
ecn no	ELX-N-26836-1
rel level	Released
dwg no	10125823
rev	B
sheet	4 of 4