MATERIAL NUMBER	ALTERNATE NUMBER	"S"	WIRE RANGE	COLOR	PACKAGING
190570001	A-520-02	.094/2.38	22-18 AWG	RED	LOOSE PIECE
190570003	A-520-04	.119/3.02	22-18 AWG	RED	
190570005	A-520-06	.146/3.70	22-18 AWG	RED	
190570002	A-520-02T	.094/2.38	22-18 AWG	RED	TAPE
190570004	A-520-04T	.119/3.02	22-18 AWG	RED	
190570006	A-520-06T	.146/3.70	22-18 AWG	RED	

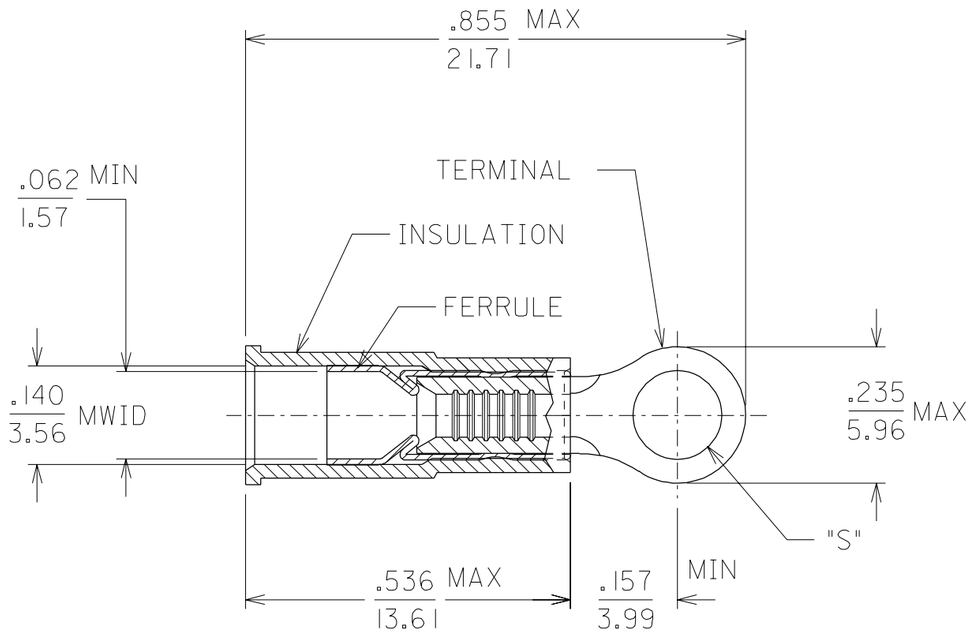

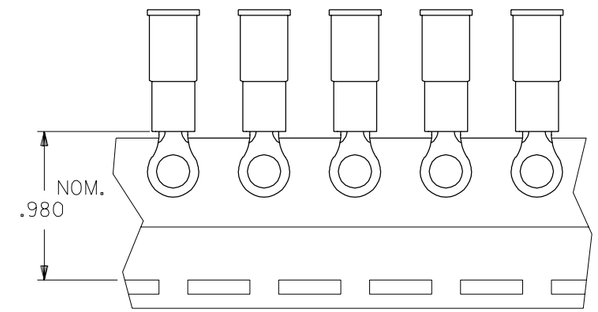

1. MATERIAL: TERMINAL:COPPER
   .028/.711 THICK.
   FUNNEL FERRULE: BRASS
   PLATING: ELECTRO TIN
   INSULATION: NYLON 6/6
   COLOR: SEE CHART
2. MWID = MAXIMUM WIRE INSULATION DIAMETER
3. ALL DIMENSIONS = INCHES / MM

CUSTOMER DRAWING

LTR.	REVISIONS
A	NEW CUST. DWG. ETC2001-0288 01/03/23 EDB

DIMENSIONS SHOWN (METRIC) INCH

UNLESS OTHERWISE SPECIFIED
TOLERANCES: ANGULAR ± 1/2°

	INCH	METRIC
3 PLACE	± .005	± ---
2 PLACE	± .01	± 0.13
1 PLACE	± ---	± 0.25

DRAFT WHERE APPLICABLE MUST REMAIN WITHIN DIMENSIONS

REVISE ONLY ON CAD SYSTEM

TITLE
RING TONGUE TERMINAL
AVIKRIMP
500 SERIES

molex ETC INC.
PINELLAS PARK, FLA. 33781 U.S.A.

DRWG. BY	EDB	CHK'D. BY	HEB
APP'D. BY	RWD	SCALE	NONE

SHEET NO. 1 OF 1
DATE 01/03/23
PART NO. SEE TABLE
DRWG. NO. SD-19057-001
FILE NAME SD19057001 DGN

THIS DRAWING CONTAINS INFORMATION THAT IS PROPRIETARY TO MOLEX-ETC INC. AND SHOULD NOT BE USED WITHOUT WRITTEN PERMISSION.

DIV. ET
SIZE B