DRAWING MADE IN KOREAN PROJECTION

DIMENSIONS IN ~~INCHES~~ . MM

CUSTOMER DRAWING

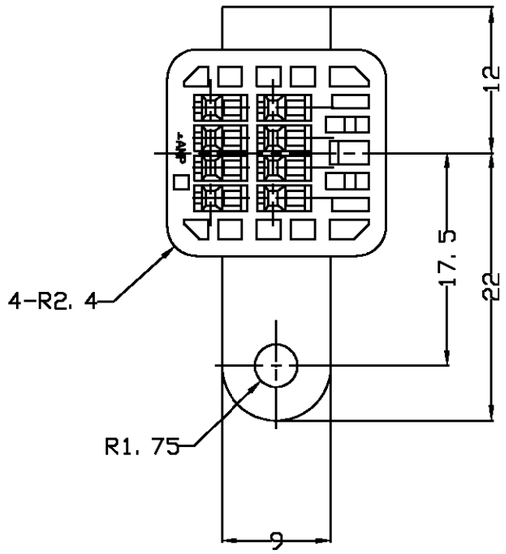

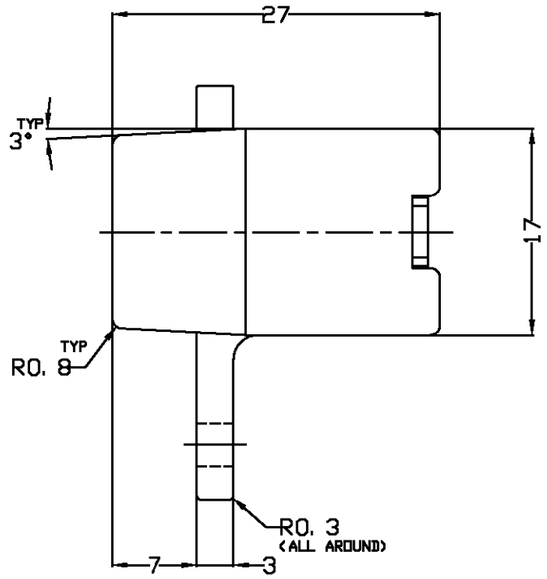

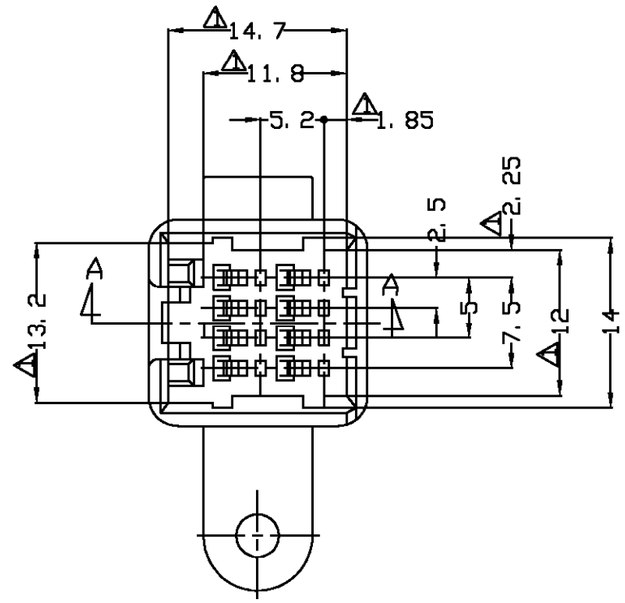

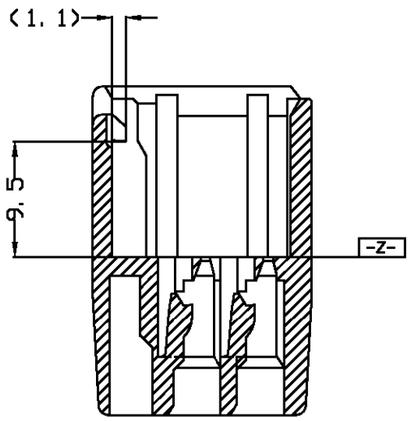

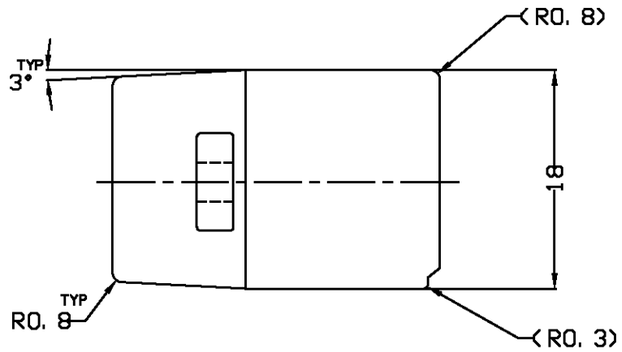

1. TO BE MEASURED WITHIN 2mm FORM -Z-
2. THE MATING PLUG HOUSING PART NUMBER: 174044
3. APPLICABLE CONTACT PART NUMBER: 173682

368191-2	BLACK
PART NO	COLOR

LTR	REVISION RECORD	DR	CHK	DATE
D	RELEASED ECN(RD97-141)	JW	JK	'97 7/09

© 1997 AMP KOREA
ALL RIGHT RESERVED AMP PRODUCTS COVERED BY PATENTS
AND OR PATENTS PENDING

AMP KOREA

WIRE RANGE ---	INSULATION DIA ---	NAME	8 POS. CAP HOUSING .040 SERIES MULTI-LOCK CONNECTOR (HMC)
MATERIAL PBT	FINISH/COLOR SEE TABLE	TOLERANCES 0<XX<10 ±0.2 10<XX<30 ±0.25 30<XX<100±0.3 ANGLES ±3°	SIZE A3 / LOC DS / NUMBER 3 6 8 1 9 1
DR	APP		SCALE 3/1 / REV D / SHEET
CHK	REL		

PRINT DIST.