THIS DRAWING IS UNPUBLISHED. RELEASED FOR PUBLICATION 20
© COPYRIGHT 20 BY - ALL RIGHTS RESERVED.

| REVISIONS | | | | | |
|---|---|---|---|---|---|
| P | LTR | DESCRIPTION | DATE | DWN | APVD |
| | J2 | REVISED PER ECR-17-017609 | 04DEC2017 | JB | DZ |

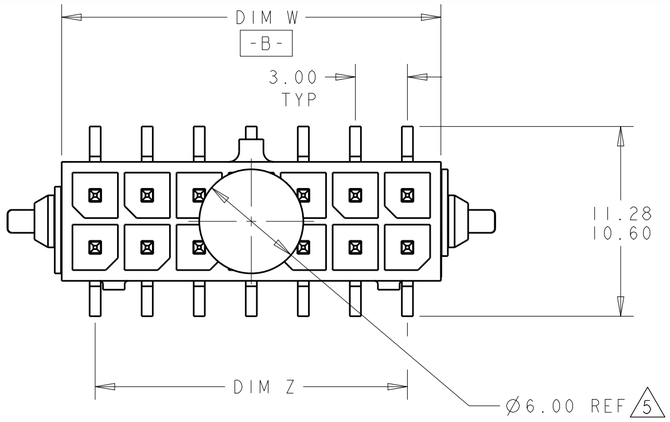


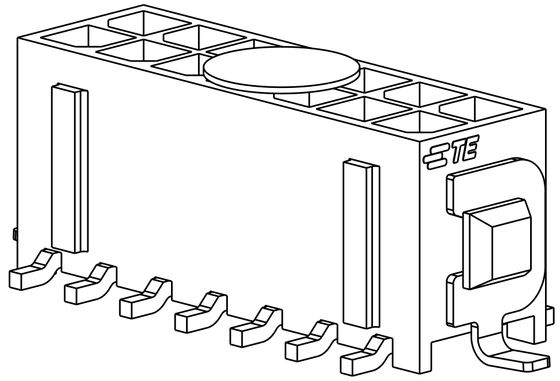

SCALE 6:1

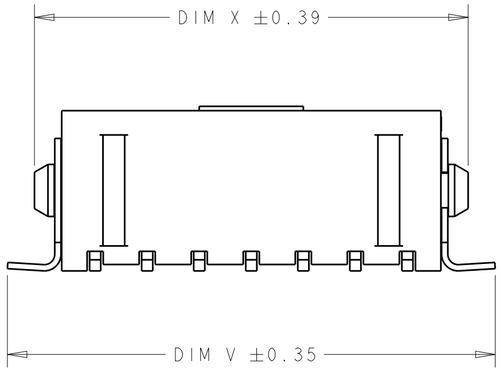


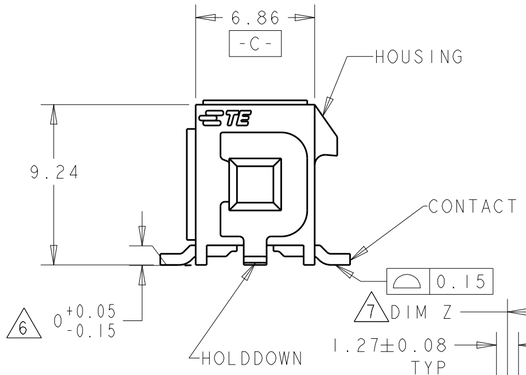


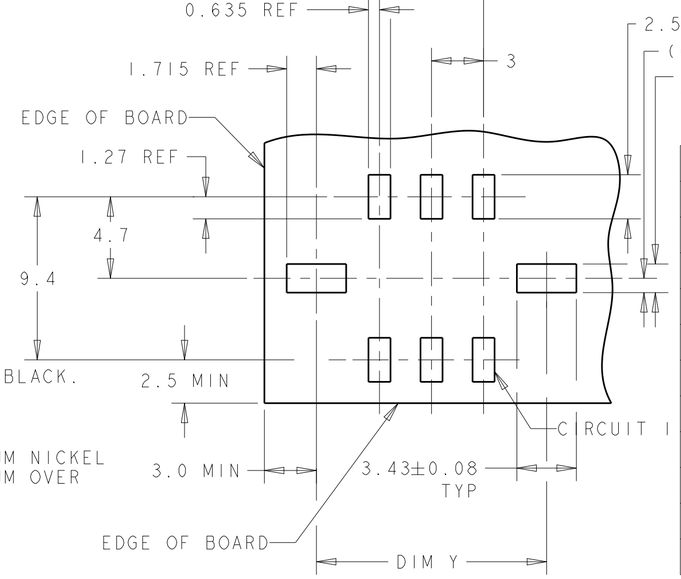


RECOMMENDED PCB LAYOUT (COMPONENT SIDE) 4

| | FINISH | DIM V | DIM W | DIM Y | DIM Z | DIM X | NO. OF POSN. | PART NUMBER |
|---|---|---|---|---|---|---|---|---|
| | 8 | 43.04 | 36.86 | 40.27 | 33.00 | 40.00 | 24 | 5-794637-4 |
| | 8 | 40.04 | 33.86 | 37.27 | 30.00 | 37.00 | 22 | 5-794637-2 |
| | 8 | 37.04 | 30.86 | 34.27 | 27.00 | 34.00 | 20 | 5-794637-0 |
| | 8 | 34.04 | 27.86 | 31.27 | 24.00 | 31.00 | 18 | 4-794637-8 |
| | 8 | 31.04 | 24.86 | 28.27 | 21.00 | 28.00 | 16 | 4-794637-6 |
| | 8 | 28.04 | 21.86 | 25.27 | 18.00 | 25.00 | 14 | 4-794637-4 |
| | 8 | 25.04 | 18.86 | 22.27 | 15.00 | 22.00 | 12 | 4-794637-2 |
| | 8 | 22.04 | 15.86 | 19.27 | 12.00 | 19.00 | 10 | 4-794637-0 |
| | 8 | 19.04 | 12.86 | 16.27 | 9.00 | 16.00 | 8 | 3-794637-8 |
| | 8 | 16.04 | 9.86 | 13.27 | 6.00 | 13.00 | 6 | 3-794637-6 |
| | 8 | 13.04 | 6.86 | 10.27 | 3.00 | 10.00 | 4 | 3-794637-4 |
| | 8 | 10.04 | 3.86 | 7.27 | - | 7.00 | 2 | 3-794637-2 |
| SUPERSEDED BY 5-794637-4 | 2 | 43.04 | 36.86 | 40.27 | 33.00 | 40.00 | 24 | ~~2-794637-4~~ |
| SUPERSEDED BY 5-794637-2 | 2 | 40.04 | 33.86 | 37.27 | 30.00 | 37.00 | 22 | ~~2-794637-2~~ |
| SUPERSEDED BY 5-794637-0 | 2 | 37.04 | 30.86 | 34.27 | 27.00 | 34.00 | 20 | ~~2-794637-0~~ |
| SUPERSEDED BY 4-794637-8 | 2 | 34.04 | 27.86 | 31.27 | 24.00 | 31.00 | 18 | ~~1-794637-8~~ |
| SUPERSEDED BY 4-794637-6 | 2 | 31.04 | 24.86 | 28.27 | 21.00 | 28.00 | 16 | ~~1-794637-6~~ |
| SUPERSEDED BY 4-794637-4 | 2 | 28.04 | 21.86 | 25.27 | 18.00 | 25.00 | 14 | ~~1-794637-4~~ |
| SUPERSEDED BY 4-794637-2 | 2 | 25.04 | 18.86 | 22.27 | 15.00 | 22.00 | 12 | ~~1-794637-2~~ |
| SUPERSEDED BY 4-794637-0 | 2 | 22.04 | 15.86 | 19.27 | 12.00 | 19.00 | 10 | ~~1-794637-0~~ |
| SUPERSEDED BY 3-794637-8 | 2 | 19.04 | 12.86 | 16.27 | 9.00 | 16.00 | 8 | ~~794637-8~~ |
| SUPERSEDED BY 3-794637-6 | 2 | 16.04 | 9.86 | 13.27 | 6.00 | 13.00 | 6 | ~~794637-6~~ |
| SUPERSEDED BY 3-794637-4 | 2 | 13.04 | 6.86 | 10.27 | 3.00 | 10.00 | 4 | ~~794637-4~~ |
| SUPERSEDED BY 3-794637-2 | 2 | 10.04 | 3.86 | 7.27 | - | 7.00 | 2 | ~~794637-2~~ |

794637

1 MATERIAL;
CONTACTS - BRASS.
HOUSING - UL 94V-0 RATED HIGH TEMP NYLON, COLOR; BLACK.
HOLDDOWNS - PHOSPHOR BRONZE.

2 PLATING;
CONTACTS - 0.38µm MINIMUM GOLD OVER 2.54µm MINIMUM NICKEL ON MATING AREA. 2.54µm TIN-LEAD MINIMUM OVER 2.54µm NICKEL MINIMUM ON SOLDER TAILS.
HOLDOWNS - 2.54µm TIN LEAD.

4 RECOMMENDED PC BOARD THICKNESS OF 1.57.

5 KAPTON VACUUM PICK UP BUTTON.

6 DIMENSION APPLIES TO SOLDERTAIL SURFACES AND STANDOFF SURFACES.

7 ALL SOLDERTAILS AND HOLDDOWNS.

8 PLATING;
CONTACTS - 0.38µm MINIMUM GOLD OVER 2.54µm MINIMUM NICKEL ON MATING AREA. 2.54µm MATTE TIN MINIMUM OVER 2.54µm NICKEL MINIMUM ON SOLDER TAILS.
HOLDOWNS - 2.54µm MATTE TIN.

THIS DRAWING IS A CONTROLLED DOCUMENT.

DIMENSIONS: mm

TOLERANCES UNLESS OTHERWISE SPECIFIED:
0 PLC ±-
1 PLC ±-
2 PLC ±0.13
3 PLC ±-
4 PLC ±-
ANGLES ±-
FINISH SEE TABLE

MATERIAL 1

DWN 19-MAR-2003 K. WHITAKER
CHK 19-MAR-2003 C. JONES
APVD 19-MAR-2003 C. JONES
PRODUCT SPEC -
APPLICATION SPEC -
WEIGHT -

TE Connectivity

NAME SURFACE MOUNT, VERTICAL, MECHANICAL HOLDDOWN, ASSEMBLY, 15 GOLD HEADER DUAL ROW, MICRO MATE-N-LOK TM

| SIZE | CAGE CODE | DRAWING NO | RESTRICTED TO |
|---|---|---|---|
| A2 | 00779 | C-794637 | - |

CUSTOMER DRAWING | SCALE 4:1 | SHEET 1 OF 1 | REV J2

1471-9 (3/13)