THIS DRAWING IS UNPUBLISHED. RELEASED FOR PUBLICATION 20
© COPYRIGHT 20 BY - ALL RIGHTS RESERVED.

REVISIONS

P	LTR	DESCRIPTION	DATE	DWN	APVD
	C2	REVISED PER ECO-15-010004	13JUL2015	NK	MZ
	D	REVISED PER ECO-16-018352	24MAR2017	RS	MZ

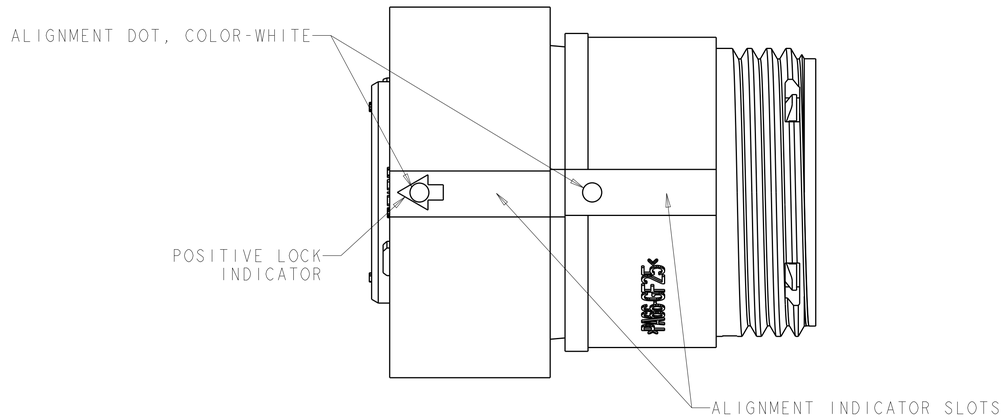

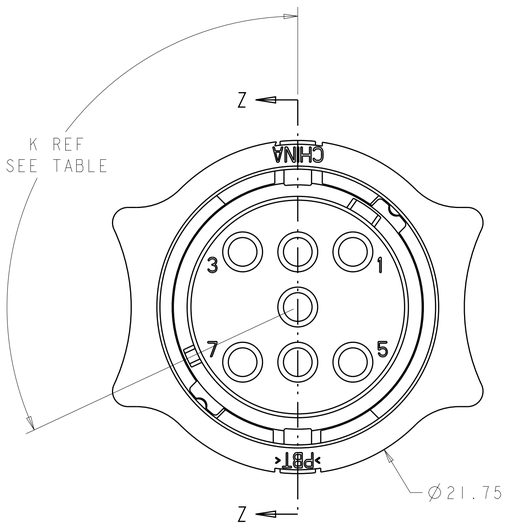

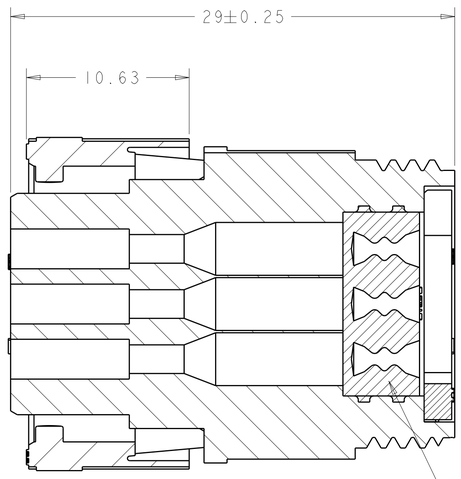

SECTION Z-Z

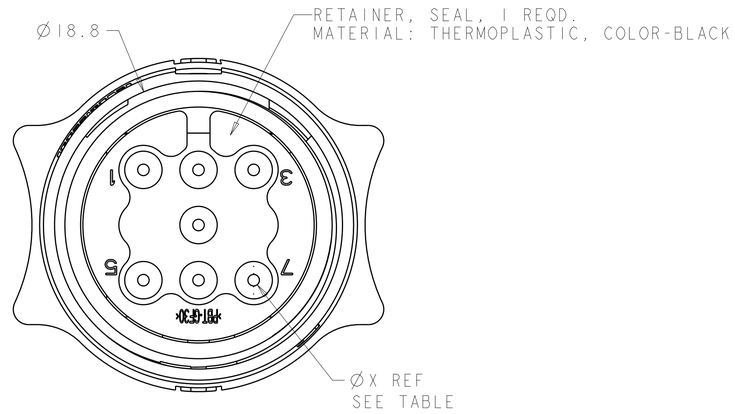

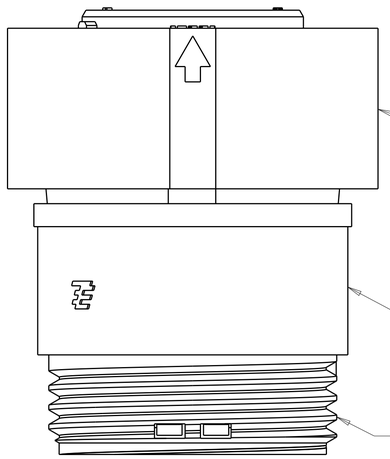

	SEAL, WIRE ENTRY COLOR	ØX REF	K REF	PART NUMBER
OBSOLETE	YELLOW	Ø0.75	135°	1445818-4
	NATURAL	Ø1.5	115°	1445818-3
OBSOLETE	NATURAL	Ø1.5	135°	1445818-2
	YELLOW	Ø0.75	115°	1445818-1

THIS DRAWING IS A CONTROLLED DOCUMENT.

DIMENSIONS: mm

TOLERANCES UNLESS OTHERWISE SPECIFIED:
0 PLC ±-
1 PLC ±-
2 PLC ±0.13
3 PLC ±-
4 PLC ±-
ANGLES ±-

MATERIAL: SEE CALLOUT
FINISH: - -

DWN SHANE WIEST 16OCT2001
CHK G DOUTY 16OCT2001
APVD H WAKEEM 13JUN2003
PRODUCT SPEC -
APPLICATION SPEC -
WEIGHT -

TE Connectivity

NAME: ASSEMBLY, PLUG, SIZE II, 7 POSITION, SEALED, MINI CPC
-

SIZE A1 | CAGE CODE 00779 | DRAWING NO C-1445818 | RESTRICTED TO -

CUSTOMER DRAWING | SCALE 5:1 | SHEET 1 OF 1 | REV D

4805 (3/13)