THIS DRAWING IS UNPUBLISHED. RELEASED FOR PUBLICATION - , - .
© COPYRIGHT – TE Connectivity ALL RIGHTS RESERVED.

REVISIONS

P	LTR	DESCRIPTION	DATE	DWN	APVD
	A5	REVISED PER ECR-16-016780	28AUG2017	NG	MKO

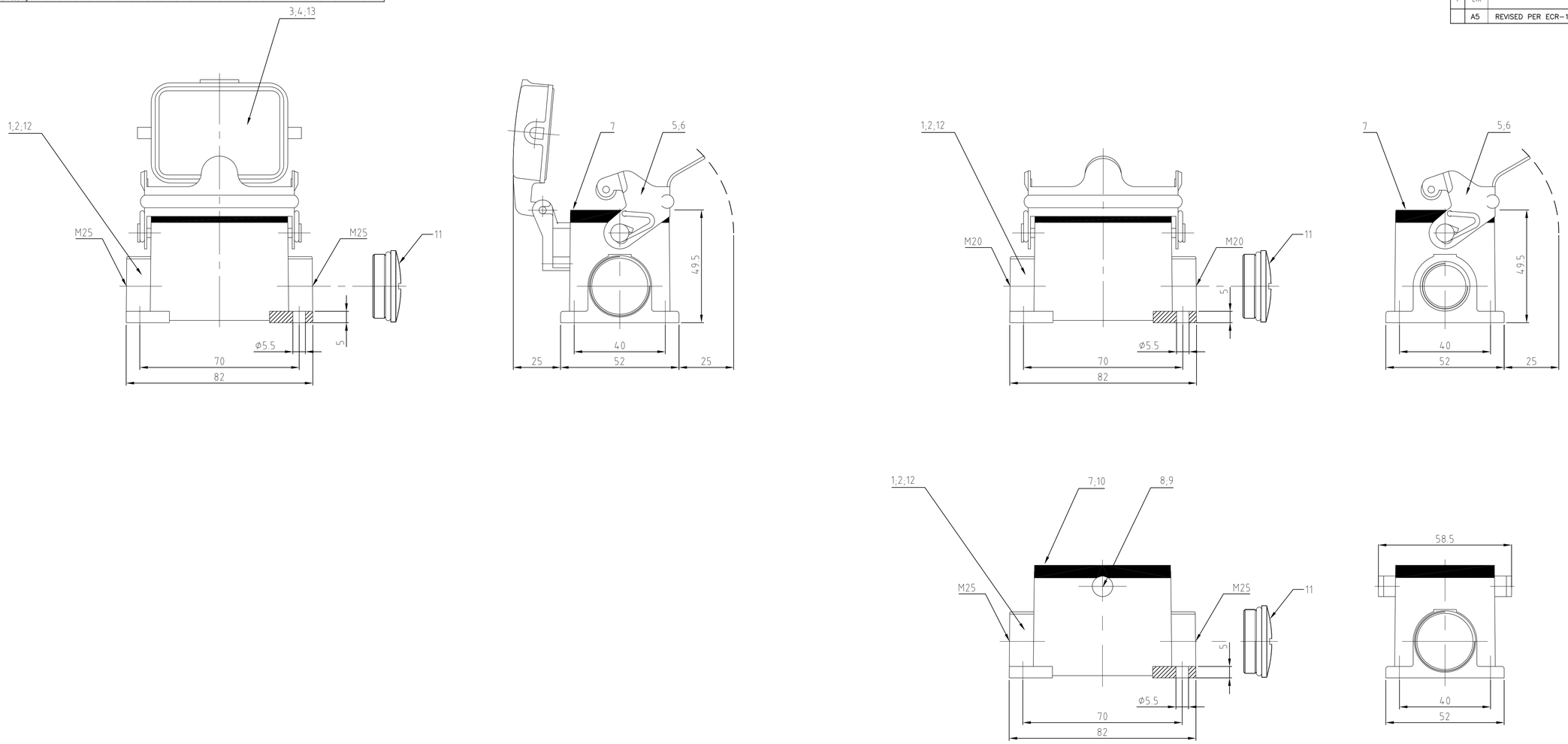

Notes:

1. Material: Housing: aluminium diecasting alloy
   Seals: Neoprene
2. Surface: Varnisch- aluminium oxid+
   Varnisch black
   - grey
3. Varnish on the inside not necessarily
4. Special packaking

Bemerkungen:

1. Material: Gehäuse: Alu-Druckguß-Legierung
   Dichtung: Neoprene
2. Oberfläche: Lackierung - Aluminiumoxid+
   Lackierung schwarz
   - grau
3. Lackierung im Gehäuseinnere ist nicht notwendig
4. Sonderverpackung

HB.6.SGD-LB.2.M25.Z+BS OBSOLETE	HB.6.SG-LB.2.M25.Z+BS OBSOLETE	HB.6.SGD-LB.2.M25.Z-Viton OBSOLETE	HB.6.SG-LB.2.M25.Z.KM	HB-K/Z.6.SG-Z/VGR.2.M25.Z	HB-Z.6.SG-Z/VGR.2.M25.Z	HB-K.6.SGD-LB.2.M25.Z	HB.6.SGD-LB.2.M25.Z	HB.6.SG-LB.2.M20.Z OBSOLETE	HB-K.6.SG-LB.2.M25.Z	HB.6.SG-LB.2.M25.Z	DESCRIPTION / BENENNUNG	MATERIAL (1)	SURFACE / OBERFLÄCHE (2)	COLOR / FARBE (2)	ITEM NO. POS.	REMARKS / BEMERKUNGEN
1											Deckel HB/cover	aluminium/ALU		grau/grey	13	ohne Logo
1	1										Sockelgehäuse HB surface mounted housing side entry	aluminium/ALU		grau/grey	12	ohne Logo
1	1										Blanking Piece with Seal	Stahl/steel		blau/blue	11	M25
1		1									Profildichtung/profile seal	Viton		grau/grey	10	
				2							ZB-Bügelbolzen/central clip bolt	V2A/stainl. steel	blank/even		9	
					2						ZB-Bügelbolzen/central clip bolt	Stahl/steel	verzinkt/zink plated	blau/blue	8	
1	1		1	1	1	1	1	1	1	1	Profildichtung/profile seal	Neoprene		black/schwarz	7	
						1			1		LB-Bügel/side clip	V2A/stanl. steel	blank/even		6	
1	1	1	1				1	1		1	LB-Bügel/side clip	Stahl/steel	verzinkt/zink plated	blau/blue	5	
						1					Deckel HB-K/cover	aluminium/ALU	Aluminiumoxid	black/schwarz	4	
		1					1				Deckel HB/cover	aluminium/ALU		grau/grey	3	
				1		1			1		Sockelgehäuse HB-K/ surface mounted housing side entry	aluminium/ALU	Aluminiumoxid	black/schwarz	2	
		1	1		1		1	1		1	Sockelgehäuse HB surface mounted housing side entry	aluminium/ALU		grau/grey	1	
1-1	1-0	0-9	0-8	0-5	0-6	0-3	0-1	0-7	0-4	0-2						

THIS DRAWING IS A CONTROLLED DOCUMENT.

DIMENSIONS: mm

TOLERANCES UNLESS OTHERWISE SPECIFIED: n ISO 8015 n ISO 14405 - MAX -E n DIN 16901 - LG2
0 PLC ± –
1 PLC ± –
2 PLC ± –
3 PLC ± –
4 PLC ± –
ANGLES ± –

MATERIAL (1) FINISH (2)

DWN Schneider 07.11.2002
CHK Schneider 07.11.2002
APVD –
PRODUCT SPEC –
APPLICATION SPEC –
WEIGHT –

TE Connectivity

NAME: Surface mounted housing side entry
Sockelgehäuse HB.6.SG.2.M25.Z
–

SIZE A1 | CAGE CODE 00779 | DRAWING NO C–– | RESTRICTED TO –

CUSTOMER DRAWING | SCALE 1:1 | SHEET 1 OF 1 | REV A5

4805 (1/15)