THIS DRAWING IS UNPUBLISHED. RELEASED FOR PUBLICATION –,– .
© COPYRIGHT – By – ALL RIGHTS RESERVED.

LOC	DIST
J	—

REVISIONS 変更

P	LTR	DESCRIPTION	DATE	DWN	APVD
	A1	REVISED PER ECR-15-001853	10FEB'15	H.G	T.D

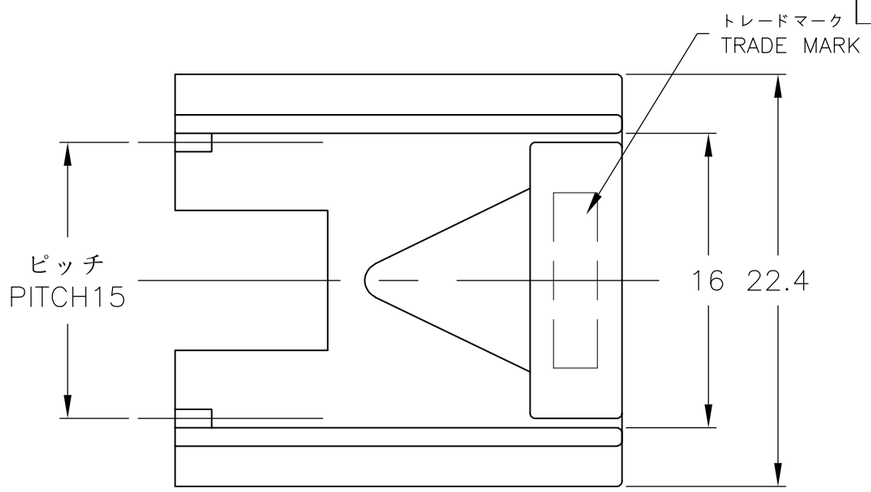

NOTES
1. APPLICABLE CONTACT PART NUMBER : 170324-X, 170325-X, 170326-X
2. BLUE PARTS MAY APPEAR MEDIUM BLUE TO LIGHT BLUE TO LIGHT GRAY IN COLOR AND MAY ALSO EXHIEBIT A MARBLING EFFECT

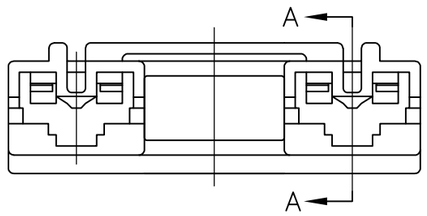

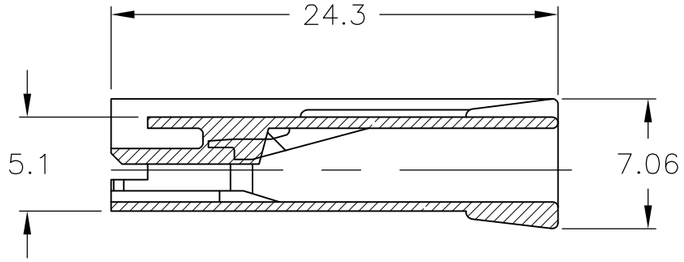

断面A-A

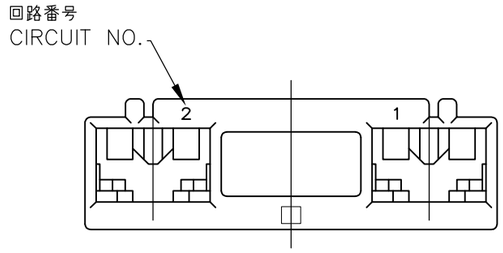

タブ推奨図
RECOMMENDED TAB

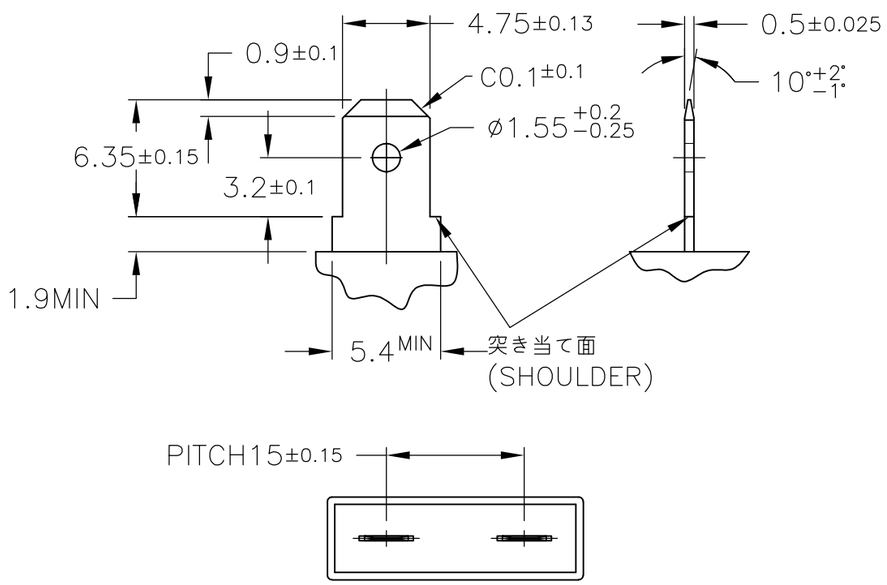

材料 (MATERIAL)	色調 (COLOR)	型番(PART NUMBER)
66NYLON (UL94V-0)	2 BLUE	1-176498-6
66NYLON (UL94V-2)	黄色 (YELLOW)	3-176498-4
66NYLON (UL94V-0)	青色 (BLUE)	176498-6
	黄色 (YELLOW)	176498-4
	黒色 (BLACK)	176498-2
	自然色(NATURAL)	176498-1

THIS DRAWING IS A CONTROLLED DOCUMENT.

DIMENSIONS: 単位: 粍 mm

TOLERANCES UNLESS OTHERWISE SPECIFIED: 一般公差
0 PLC ±
1 PLC 10以下 ±0.2
2 PLC 30以下 ±0.25
3 PLC 100以下 ±0.3
4 PLC ±
ANGLES ±3°

MATERIAL 材料: SEE TABLE
FINISH 仕上

DWN J.SATO	07SEP2007	
CHK S.MANABE	07SEP2007	
APVD S.MANABE	07SEP2007	
PRODUCT SPEC 製品規格	108-5126	
APPLICATION SPEC 取付適用規格		
WEIGHT		

TE Connectivity

NAME 名称: 187 SERIES POSITIVE LOCK MK-II 2P REC HSG

SIZE	CAGE CODE	DRAWING NO 番号	RESTRICTED TO
A3	00779	C-176498	—

CUSTOMER DRAWING | SCALE 尺度 3:1 | SHEET 1 OF 1 | REV A1