MICRO SWITCH
a Honeywell Division
FED.MFG.CODE 91929

LEVER-SWITCH ACTUATOR

CATALOG LISTING
LSZ67AA

THIS DRAWING COVERS A PROPRIETARY ITEM AND IS THE PROPERTY OF MICRO SWITCH, A DIVISION OF HONEYWELL. THIS DRAWING IS NOT TO BE COPIED OR USED WITHOUT THE APPROVAL OF MICRO SWITCH.

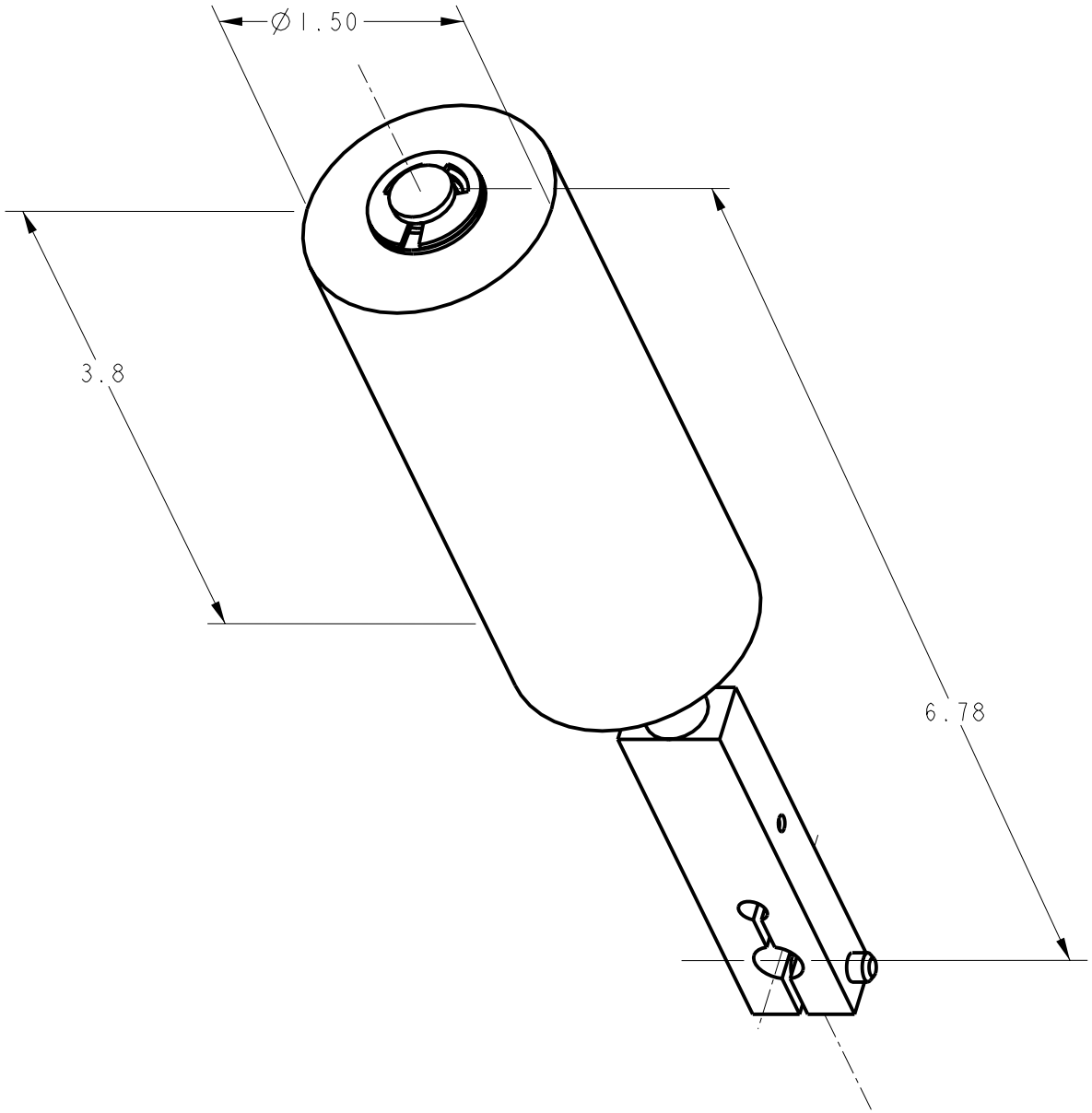

LSZ67AA
CATALOG LISTING
PAGE 1 OF 1
RELEASE NO. PR-21291
REPLACES
ISSUE 1
CHECK
REVISIONS
CHECK