Jul.1.2019 Copyright 2019 HIROSE ELECTRIC CO., LTD. All Rights Reserved.
In case of consideration for using Automotive equipment / device which demand high reliability, kindly contact our sales window correspondents.

HRS DRAWING FOR REFERENCE

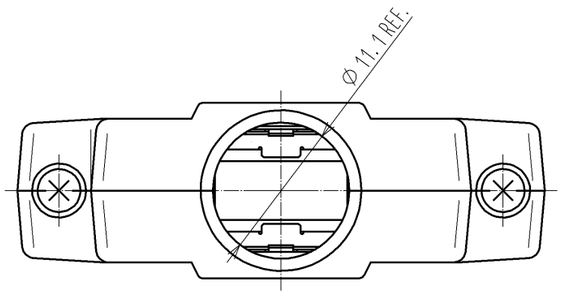

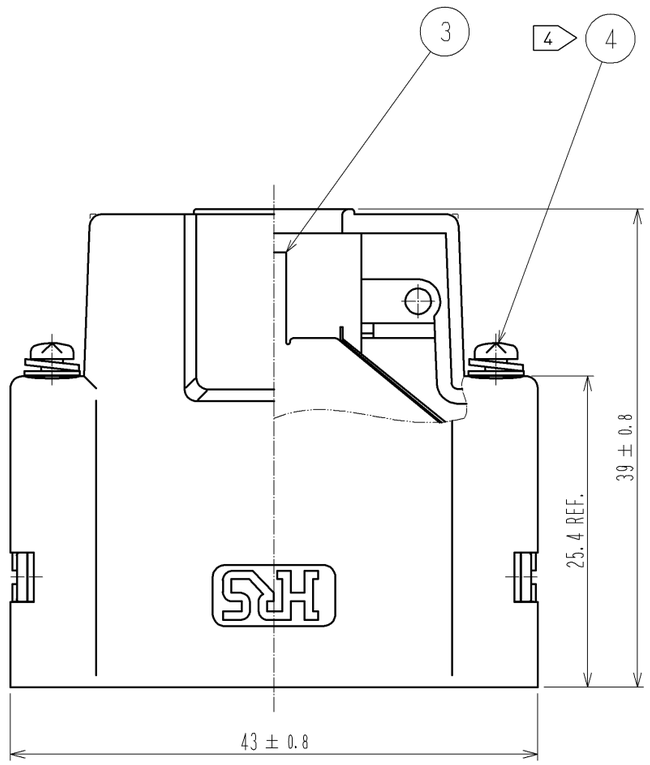

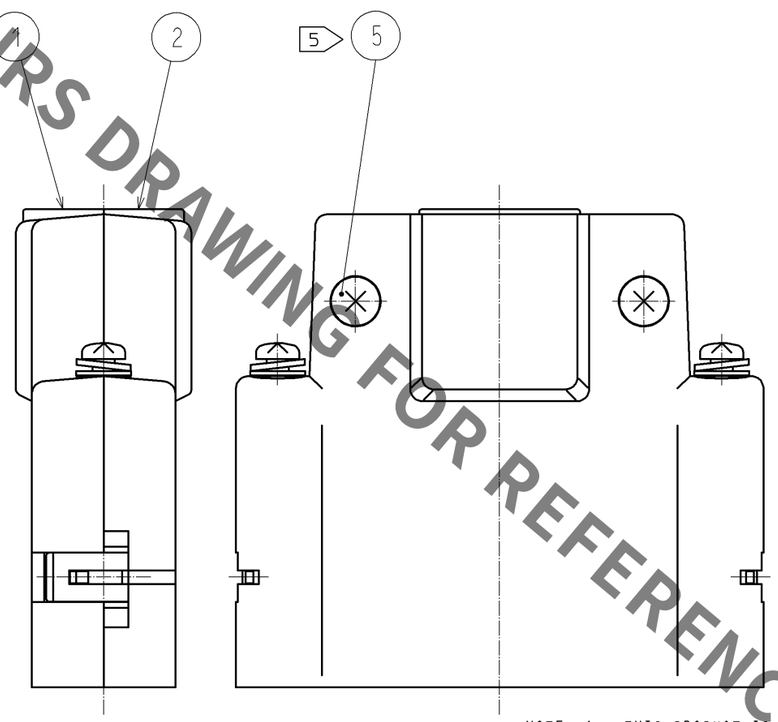

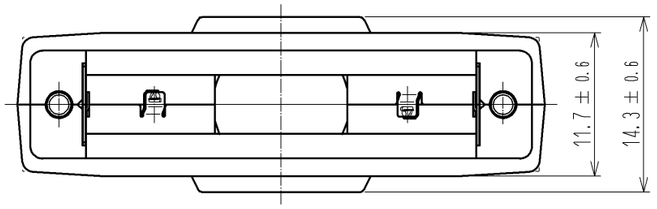

2 ASSEMBLED

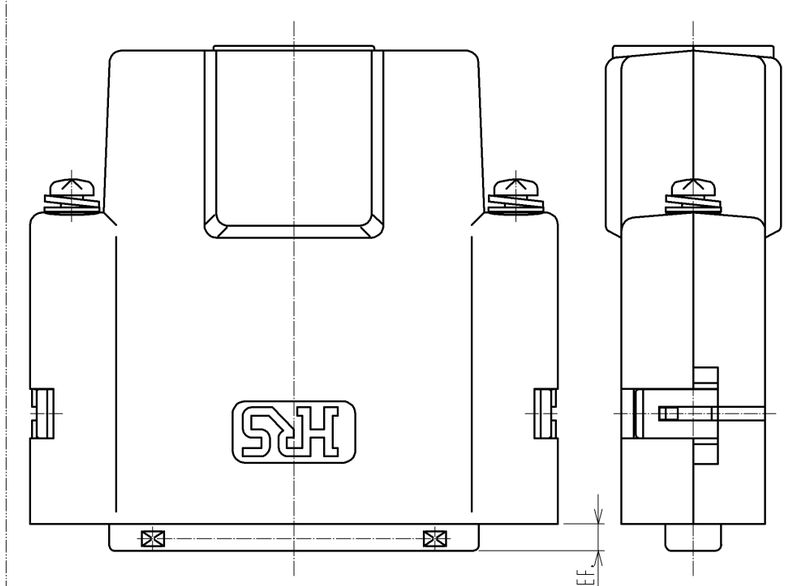

NOTE 1. THIS PRODUCT IS DELIVERED SEPARATELY.

⚠1 2 AS SHOWN IN THE FIGURE, THIS PRODUCT SHALL BE USED ASSEMBLED TO A CONNECTOR UNIT 'DH3*B-51S'.
A CLAMP 'DH-51-CMB(9.6)' IS NEEDED WHEN ASSEMBLING THE UNIT.

3. THIS PRODUCT SHALL BE MATED WITH A RECEPTACLE 'DH60-51P*'
WHICH ASSEMBLED LOCK SCREWS 'DH-LNA***'.

4 A RECOMMENDED SCREW TIGHTENING TORQUE TO THE LOCK SCREWS TO BE FROM 0.06 TO 0.07 N・m.

5 A RECOMMENDED SCREW TIGHTENING TORQUE FOR COVERS TO BE FROM 0.1 TO 0.15 N・m.

NO.	MATERIAL	FINISH , REMARKS
3	STAINLESS STEEL	PLATING : NICKEL 0.1μm MIN
2 1	PC	UL94V-0 (BLACK)

NO.	MATERIAL	FINISH , REMARKS
5	STEEL	TRIVALENT BLACK CHROMATE
4	STEEL	OVER PLATING : NICKEL 2μm MIN UNDER PLATING : COPPER 1μm MIN M2×0.4

UNITS	SCALE		COUNT	DESCRIPTION OF REVISIONS	DESIGNED	CHECKED	DATE
mm	4 : 1	⚠1	1	DIS-E-003061	TM. ONO	KN. ICHIKAWA	09.12.14

HIROSE ELECTRIC CO., LTD.

APPROVED	KN. ICHIKAWA	09.11.17	DRAWING NO. EDC3-126589-00
CHECKED	KN. ICHIKAWA	09.11.17	PART NO. DH-51-CV1B
DESIGNED	MO. SHIMOYAMA	09.11.17	
DRAWN	TM. ONO	09.11.16	CODE NO. CL244-0012-0-00 ⚠1 1/2
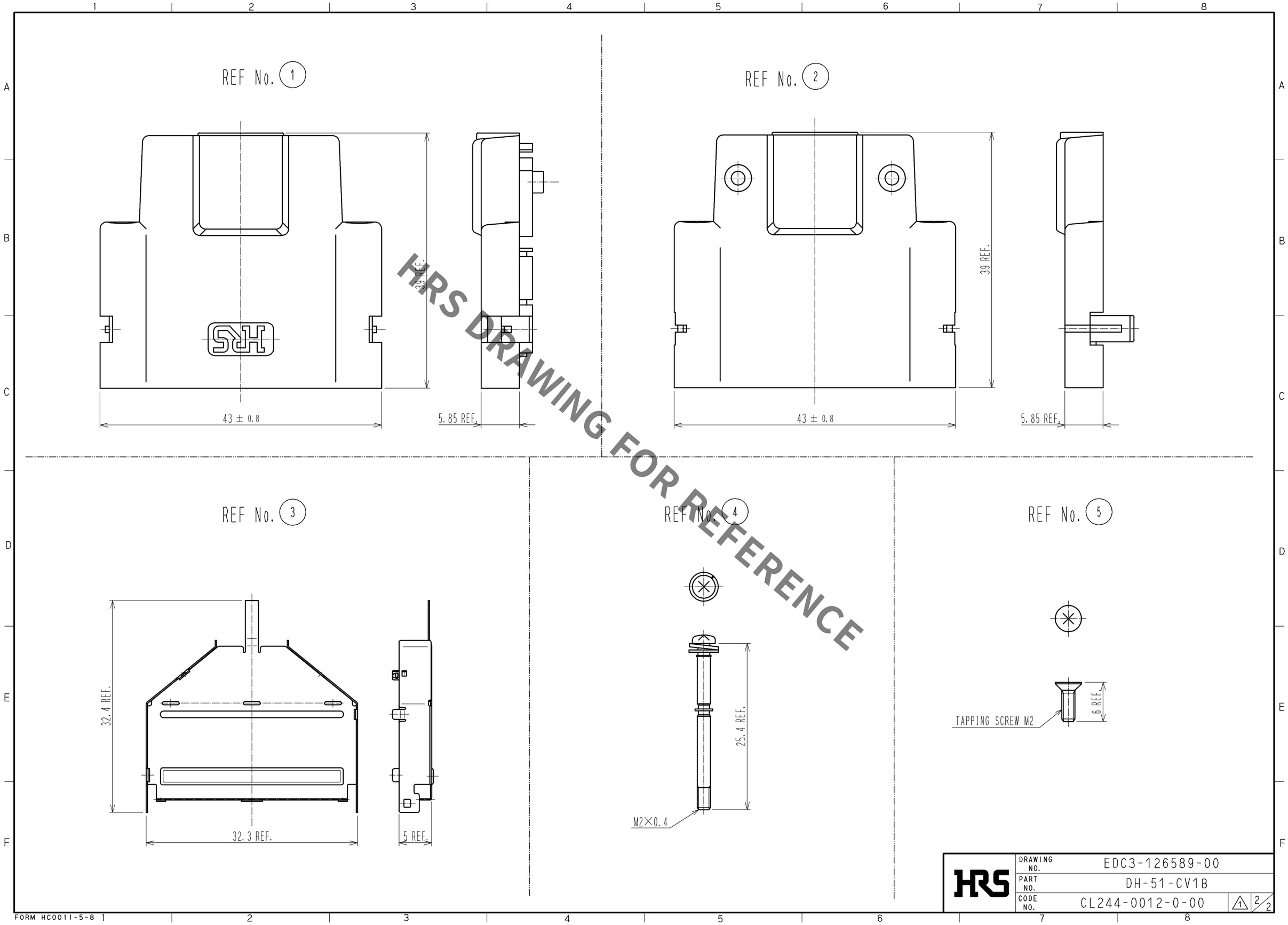
Jul.1.2019 Copyright 2019 HIROSE ELECTRIC CO., LTD. All Rights Reserved.
In case of consideration for using Automotive equipment / device which demand high reliability, kindly contact our sales window correspondents.