PIN RECEPTACLES
for .022" - .034" diameter pins and .025" square pins

9808

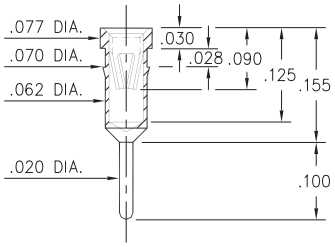

9808-0-15-XX-16-XX-04-0
Press-fit in .067 mounting hole

9101

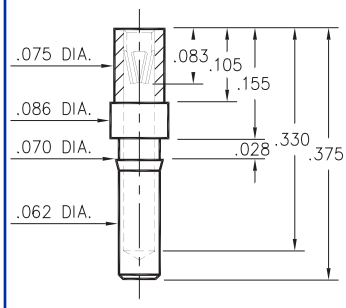

9101-0-15-XX-16-XX-10-0
Press-fit in .067 mounting hole

5650

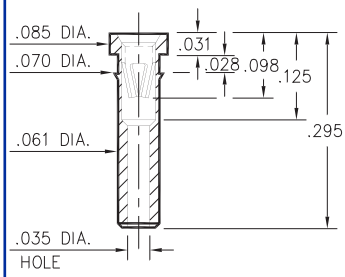

5650-0-19-XX-16-XX-10-0
Press-fit in .067 mounting hole

8679

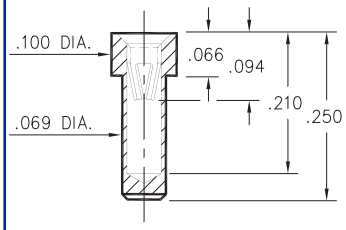

8679-0-15-XX-16-XX-10-0
Solder mount in .071 min. mounting hole

8827

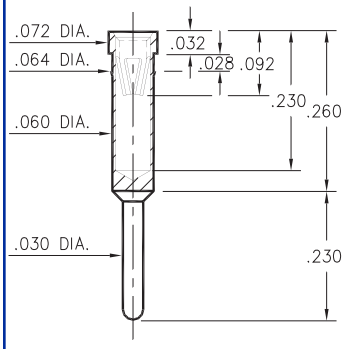

8827-0-15-XX-16-XX-04-0
Press-fit in .061 mounting hole

6021

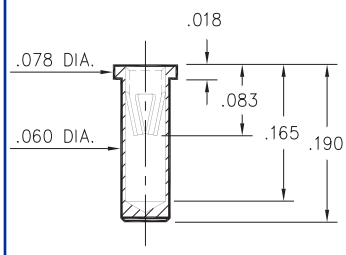

6021-0-15-XX-16-XX-10-0
Solder mount in .062 min. mounting hole

1873

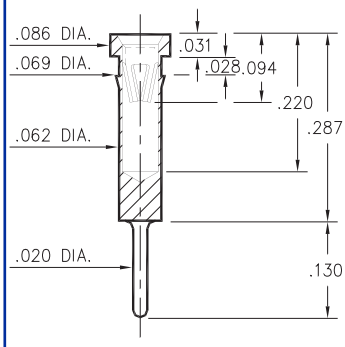

1873-0-15-XX-16-XX-04-0
Press-fit in .066 mounting hole

SPECIFICATIONS

SHELL MATERIAL:
Brass Alloy 360, 1/2 Hard

CONTACT MATERIAL:
Beryllium Copper Alloy 172, HT

DIMENSION IN INCHES
TOLERANCES ON:
LENGTHS: ±.005
DIAMETERS: ±.002
ANGLES: ± 2°

ORDER CODE: XXXX - X - 1X - XX - 16 - XX - XX - 0

BASIC PART #

SPECIFY SHELL FINISH:
01 200μ" TIN/LEAD OVER NICKEL
◇ **80** 200μ" TIN OVER NICKEL (RoHS)
◇ **15** 10μ" GOLD OVER NICKEL (RoHS)

SPECIFY CONTACT FINISH:
01 200μ" TIN/LEAD OVER NICKEL
◇ **80** 200μ" TIN OVER NICKEL (RoHS)
◇ **27** 30μ" GOLD OVER NICKEL (RoHS)

RoHS 2002/95/EC

CONTACT
#16 CONTACT (DATA ON PAGE 222)