THIS DRAWING IS UNPUBLISHED. RELEASED FOR PUBLICATION 20
© COPYRIGHT 20 BY - ALL RIGHTS RESERVED.

| REVISIONS | | | | | |
|---|---|---|---|---|---|
| P | LTR | DESCRIPTION | DATE | DWN | APVD |
| | C1 | REVISED PER ECR-16-011506 | 23JUN2017 | NK | CX |

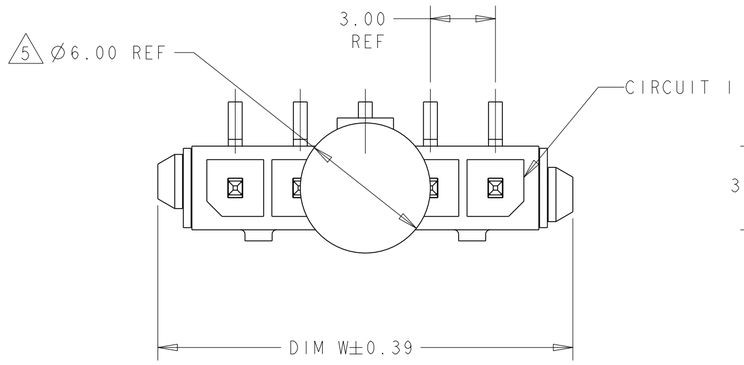


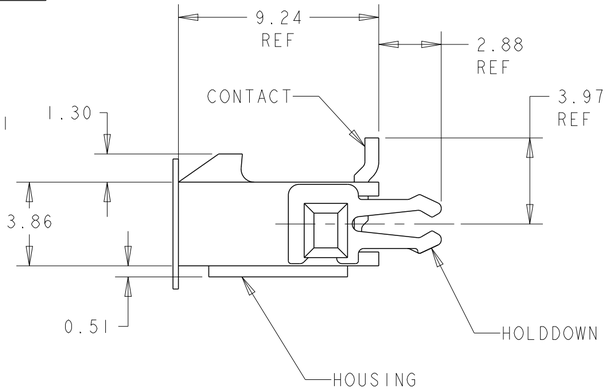


1 MATERIAL: CONTACTS - BRASS
HOUSING - UL 94V-0 RATED HIGH TEMP NYLON, COLOR BLACK.
HOLDDOWNS: - PHOSPHOR BRONZE.

2 PLATING: CONTACTS - 0.76µm MINIMUM GOLD ON MATING END, 2.54µm MINIMUM TIN LEAD ON SOLDER TAILS, BOTH OVER 1.27µm MINIMUM NICKEL.
HOLDDOWNS: 2.54µm MINIMUM MATTE TIN OVER 1.27µm MINIMUM NICKEL.

4 RECOMMENDED PC BOARD THICKNESS OF 1.57.

5 KAPTON VACUUM PICK UP BUTTON.

6 PLATING: CONTACTS - 0.76µm MINIMUM GOLD ON MATING END, 2.54µm MINIMUM MATTE TIN ON SOLDER TAILS, BOTH OVER 1.27µm MINIMUM NICKEL.
HOLDDOWNS: 2.54µm MINIMUM MATTE TIN OVER 1.27µm MINIMUM NICKEL.

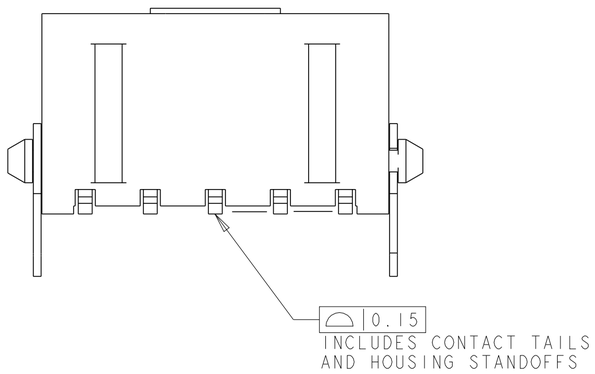


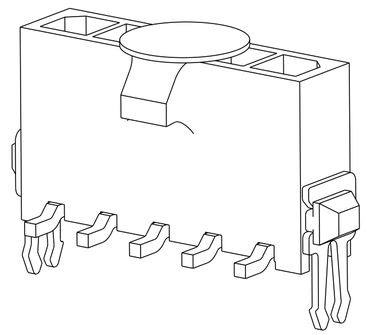

| | | | | | | |
|---|---|---|---|---|---|---|
| | 6 | 33.00 | 37.43 | 40.00 | 12 | 3-1445095-2 |
| | 6 | 30.00 | 34.43 | 37.00 | 11 | 3-1445095-1 |
| | 6 | 27.00 | 31.43 | 34.00 | 10 | 3-1445095-0 |
| | 6 | 24.00 | 28.43 | 31.00 | 9 | 2-1445095-9 |
| | 6 | 21.00 | 25.43 | 28.00 | 8 | 2-1445095-8 |
| | 6 | 18.00 | 22.43 | 25.00 | 7 | 2-1445095-7 |
| | 6 | 15.00 | 19.43 | 22.00 | 6 | 2-1445095-6 |
| | 6 | 12.00 | 16.43 | 19.00 | 5 | 2-1445095-5 |
| | 6 | 9.00 | 13.43 | 16.00 | 4 | 2-1445095-4 |
| | 6 | 6.00 | 10.43 | 13.00 | 3 | 2-1445095-3 |
| | 6 | 3.00 | 7.43 | 10.00 | 2 | 2-1445095-2 |
| SUPERSEDED BY 3-1445095-2 | 2 | 33.00 | 37.43 | 40.00 | 12 | ~~1-1445095-2~~ |
| SUPERSEDED BY 3-1445095-1 | 2 | 30.00 | 34.43 | 37.00 | 11 | ~~1-1445095-1~~ |
| SUPERSEDED BY 3-1445095-0 | 2 | 27.00 | 31.43 | 34.00 | 10 | ~~1-1445095-0~~ |
| SUPERSEDED BY 2-1445095-9 | 2 | 24.00 | 28.43 | 31.00 | 9 | ~~1445095-9~~ |
| SUPERSEDED BY 2-1445095-8 | 2 | 21.00 | 25.43 | 28.00 | 8 | ~~1445095-8~~ |
| SUPERSEDED BY 2-1445095-7 | 2 | 18.00 | 22.43 | 25.00 | 7 | ~~1445095-7~~ |
| SUPERSEDED BY 2-1445095-6 | 2 | 15.00 | 19.43 | 22.00 | 6 | ~~1445095-6~~ |
| SUPERSEDED BY 2-1445095-5 | 2 | 12.00 | 16.43 | 19.00 | 5 | ~~1445095-5~~ |
| SUPERSEDED BY 2-1445095-4 | 2 | 9.00 | 13.43 | 16.00 | 4 | ~~1445095-4~~ |
| SUPERSEDED BY 2-1445095-3 | 2 | 6.00 | 10.43 | 13.00 | 3 | ~~1445095-3~~ |
| SUPERSEDED BY 2-1445095-2 | 2 | 3.00 | 7.43 | 10.00 | 2 | ~~1445095-2~~ |
| | FINISH | DIM Z | DIM V | DIM W | NO. OF POSN | PART NUMBER |

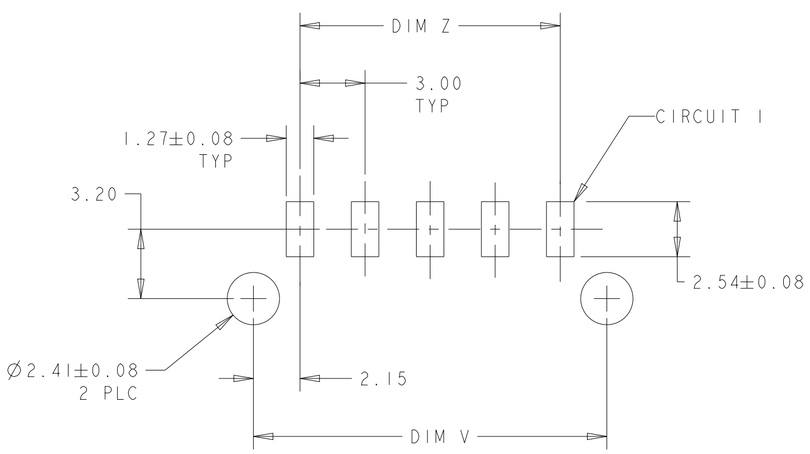


PCB LAYOUT COMPONENT SIDE 4

THIS DRAWING IS A CONTROLLED DOCUMENT.

DIMENSIONS: mm

TOLERANCES UNLESS OTHERWISE SPECIFIED:
0 PLC ±-
1 PLC ±-
2 PLC ±0.13
3 PLC ±-
4 PLC ±-
ANGLES ±-

MATERIAL 1

FINISH SEE TABLE

DWN J.ROOT 09OCT2000
CHK K. WHITAKER 20-FEB-2001
APVD C. JONES 20-FEB-2001
PRODUCT SPEC -
APPLICATION SPEC -
WEIGHT -

TE Connectivity

NAME VERTICAL SURF MOUNT HEADER ASSY, 30 MIC GOLD CONTACTS, THRU HOLE HOLDDOWNS, SGL ROW, MICRO MATE-N-LOK™

| SIZE | CAGE CODE | DRAWING NO | RESTRICTED TO |
|---|---|---|---|
| A2 | 00779 | C-1445095 | - |

CUSTOMER DRAWING SCALE 5:1 SHEET 1 OF 1 REV C1

1471-9 (3/13)