REVISIONS		
LTR	DESCRIPTION	DATE
A	INITIAL RELEASE	1/25/10
B	(CL II) SEE CHG NOTICE ECN: B1963-0000	12/12/11
C	(CL II) SEE CHG NOTICE ECN: B5923-0000	6/14/13
D	(CL II) SEE CHG NOTICE ECN: B6621-0000	1/22/14
E	(CL II) ADDED -93 & -094 ECN: B7821-0000	2/26/14
F	(CL II) SEE CHG NOTICE ECN: B8395-0000	4/30/14
G	(CL II) SEE CHG NOTICE ECN: C0271-0000	4/18/16

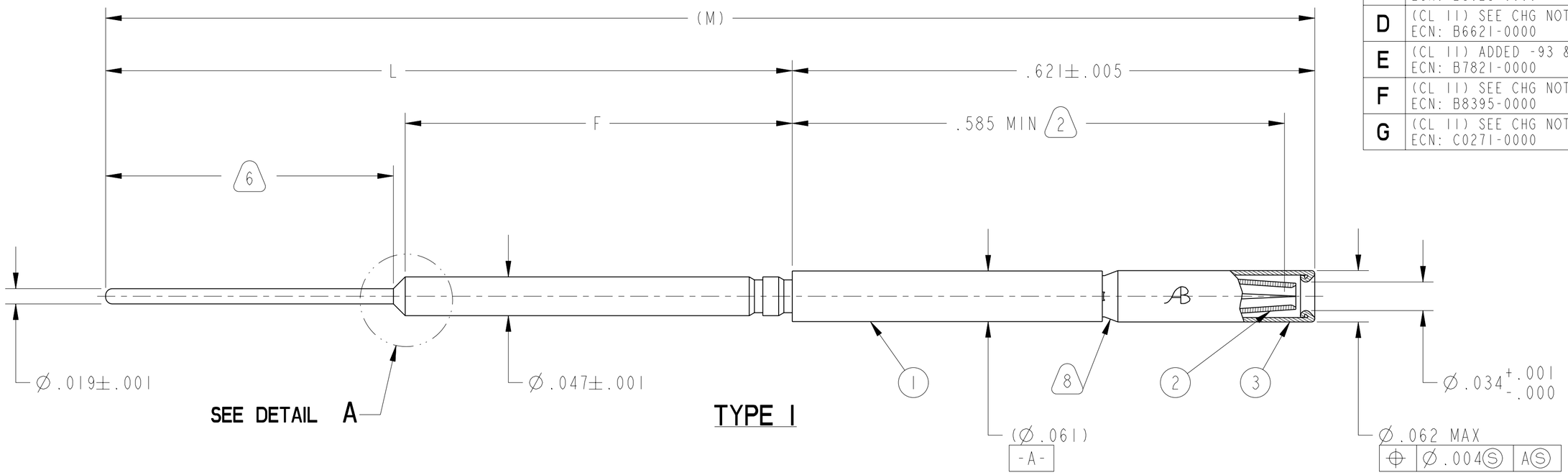

8 CRIMP SLEEVE AND SPRING TIGHTLY TO BODY PER 9-9383. A 15 POUND AXIAL LOAD SHALL NOT DISLODGE SPRING. SLEEVE SHALL WITHSTAND A .4 IN-OZ TORQUE WITHOUT SPINNING.

7. SPECIFIED GENERAL TOLERANCES:
Ø.005Ⓢ

6 INDICATED AREA MEETS THE SOLDERABILITY REQUIREMENTS OF MIL-STD-202, METHOD 208.

5. MEETS THE APPLICABLE REQUIREMENTS OF M39029/56.

4. ALL DIMENSIONS ARE AFTER PLATING.

3. PROCESS SPEC:
ASSY 9-9383
TEST 9-5272-16

2 INDICATED DIMENSION TO BE FROM SHOULDER TO POINT OF ENGAGEMENT OF SPRING AND A.0300±.0002 DIAMETER SQUARE ENDED PIN.

1. A.0305+.0002-.0000 DIA HARDENED STEEL PIN SHALL ENGAGE SOCKET WITH A FORCE NOT GREATER THAN 9.5 OZ. A .0295+.0000-.0002 DIAMETER HARDENED STEEL PIN SHALL DISENGAGE SOCKET WITH A FORCE NOT LESS THAN 1.25 OZ. DEPTH OF ENGAGEMENT OF PINS SHALL BE .116 MIN. FROM FRONT OF CONTACT. PINS SHALL HAVE A SPHERICAL TIP AND A 3 FINISH.

NOTES:

10. SOCKET SPRING TINES (ITEM 2) ARE GOLD PLATED PER AS39029 REQUIREMENTS.

9 TO COMPLETE PART NUMBER, ADD APPLICABLE SUFFIX DIGIT FOR CONTACT BODY FINISH

SUFFIX DIGIT	FINISH
1	GOLD 20-30 MICROINCHES
5	GOLD 9-7362-5
D	GOLD 9-7362-D

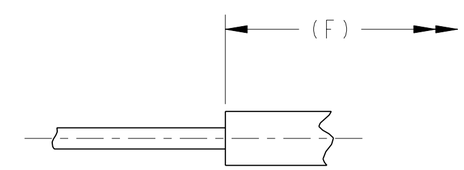

DETAIL A
TYPE II
SCALE 10

POS	QTY	PART NUMBER	DESCRIPTION	NOTE
3	1	10-407914-22B	SLEEVE	8
2	1	10-597871-725	SPRING	8
1	1	10-597879-( )	CONTACT BODY	

PARTS LIST

UNLESS OTHERWISE SPECIFIED
LINEAR DIMENSIONS ARE IN INCHES
TOLERANCES:
.XXXX = ±.0005 ANGLES= ±2°
.XXX = ±.010
.XX = ±.03
.X = ±.1
DIM.& TOL. PER ASME Y14.5M;
DRM PER MIL-DTL-31000;
OTHER Amphenol Stds. PER 9-3800
LEGENDS:
=FLAG NOTE CALL OUT
REFERENCE ONLY

SPECIFICATIONS
MATERIAL SPEC.
N/A
PROCESS SPEC.
SEE NOTE 3

APPROVALS		DATE
PREPARED BY	HTANG	20-Feb-09
ENGINEER IN CHARGE	LRATCHFORD	
DESIGN MANAGER	HJOHNSON	
DESIGN ACTIVITY GROUP	MIL-AER DEVELOP	

THIRD ANGLE PROJECTION

AMPHENOL CORPORATION
40-60 DELAWARE AVENUE
SIDNEY, N.Y. 13838

CONTACT, SOCKET,
ELECTRICAL CONNECTOR
SIZE 22D, TYPE LJT-R, HYBRID, PCB

SIZE	CAGE CODE	DOCUMENT NO.	REV.
C	77820	10-597878-( )	G

SCALE: 10.0 | REF. 10-597872-451 | SHEET 1 OF 4

10-497623

THE USE OF THIS DOCUMENT IS UNLIMITED. HOWEVER, DOCUMENTS REFERENCED HEREON MAY CONTAIN LIMITED RIGHTS DATA.

N/A
NEXT ASSEMBLY

PRO/ENGINEER INFORMATION
Pro/e Model Used:
10-597878.ASSEM
Drawing Name:
10-597878

DOCUMENT NO. 10-597878-( ) SHEET 1 OF 4 REV. G

FORMAT: C-U_E-1

VERSION 1 REVISION G RELEASE STATE Released

IMAGED / Apr . 19 2016, 11:54:03 AM

ASSEMBLY NUMBER	BODY	F	L	(M)	TYPE
10-597878-01( )	10-597879-01( )	$.460^{+.000}_{-.015}$	.816±.005	1.439	
10-597878-02( )	10-597879-02( )	$1.123^{+.000}_{-.015}$	1.393±.005	2.016	
10-597878-03( )	10-597879-03( )	$.460^{+.000}_{-.015}$	.873±.005	1.496	
10-597878-04( )	10-597879-04( )	$.460^{+.000}_{-.015}$	.733±.005	1.356	
10-597878-05( )	10-597879-05( )	$.460^{+.000}_{-.015}$	1.031±.005	1.654	
10-597878-06( )	10-597879-06( )	$1.000^{+.000}_{-.015}$	1.393±.005	2.016	
10-597878-07( )	10-597879-07( )	$.460^{+.000}_{-.015}$	.671±.005	1.294	
10-597878-08( )	10-597879-08( )	$.460^{+.000}_{-.015}$	.768±.005	1.391	I
10-597878-09( )	10-597879-09( )	$.525^{+.000}_{-.015}$	.700±.005	1.323	
10-597878-10( )	10-597879-10( )	$.460^{+.000}_{-.015}$	.553±.005	1.176	
10-597878-11( )	10-597879-11( )	$.460^{+.000}_{-.015}$	1.091±.005	1.714	
10-597878-12( )	10-597879-12( )	$.525^{+.000}_{-.015}$	.665±.005	1.288	
10-597878-13( )	10-597879-13( )	.840±.005	1.090±.005	1.713	
10-597878-14( )	10-597879-14( )	$.900^{+.000}_{-.015}$	$1.139^{+.000}_{-.015}$	1.762	
10-597878-15( )	10-597879-15( )	.460±.005	.948±.005	1.571	

ASSEMBLY NUMBER	BODY	F	L	(M)	TYPE
10-597878-16( )	10-597879-16( )	.340±.005	.453±.005	1.076	
10-597878-17( )	10-597879-17( )	$1.200^{+.000}_{-.015}$	2.392±.005	3.015	
10-597878-18( )	10-597879-18( )	$.280^{+.000}_{-.015}$	.585±.005	1.208	
10-597878-19( )	10-597879-19( )	.303±.005	.454±.003	1.077	
10-597878-20( )	10-597879-20( )	$1.123^{+.000}_{-.015}$	1.427±.005	2.050	I
10-597878-21( )	10-597879-21( )	.275±.003	.477±.005	1.100	
10-597878-22( )	10-597879-22( )	.439±.010	.590±.005	1.213	
10-597878-23( )	10-597879-23( )	.485±.005	.739±.003	1.362	
10-597878-24( )	10-597879-24( )	.415±.007	.790±.003	1.413	
10-597878-25( )	10-597879-25( )	.729±.003	.953±.005	1.576	II
10-597878-26( )	10-597879-26( )	$.486^{+.000}_{-.015}$	1.048±.010	1.671	I
10-597878-27( )	10-597879-27( )	$.525^{+.000}_{-.015}$	1.102±.003	1.725	
10-597878-28( )	10-597879-28( )	.621±.005	.801±.005	1.424	
10-597878-29( )	10-597879-29( )	.876±.005	1.073±.005	1.696	II
10-597878-30( )	10-597879-30( )	.590±.003	.690±.002	1.313	

9

9

NOTES: SEE SHEET 1

THE USE OF THIS DOCUMENT IS UNLIMITED.
HOWEVER, DOCUMENTS REFERENCED HEREON
MAY CONTAIN LIMITED RIGHTS DATA.

SIZE	CAGE CODE	DOCUMENT NO.	REV.
C	77820	10-597878-( )	G
SCALE: 6.0	REF: 10-597872-451	SHEET 2 OF 4	

IMAGED / Apr . 19 2016, 11:54:03 AM

DOCUMENT NO. 10-597878-( ) SHEET 2 OF 4 REV. G

DOCUMENT NO. 10-597878-( ) SHEET 2 OF 4 REV. G

VERSION 1 REVISION G RELEASE STATE Released

FORMAT: C-U.E-1

ASSEMBLY NUMBER	BODY	F	L	(M)	TYPE
10-597878-31( )	10-597879-31( )	$.460^{+.000}_{-.015}$	.783±.005	1.406	I
10-597878-32( )	10-597879-32( )	.804±.005	1.129±.003	1.752	
10-597878-33( )	10-597879-33( )	.479±.005	.754±.003	1.377	
10-597878-34( )	10-597879-34( )	.460±.005	1.203±.003	1.826	
10-597878-35( )	10-597879-35( )	.450±.005	.880±.005	1.503	II
10-597878-36( )	10-597879-36( )	.520±.003	.747±.005	1.370	
10-597878-37( )	10-597879-37( )	.730±.003	.830±.002	1.453	
10-597878-38( )	10-597879-38( )	$.460^{+.000}_{-.015}$	1.017±.003	1.640	I
10-597878-39( )	10-597879-39( )	1.577±.005	1.687±.005	2.310	
10-597878-40( )	10-597879-40( )	$.280^{+.000}_{-.015}$	.782±.005	1.405	II
10-597878-41( )	10-597879-41( )	$.588^{+.003}_{-.000}$	.730±.003	1.353	
10-597878-42( )	10-597879-42( )	.623±.005	.748±.005	1.371	I
10-597878-43( )	10-597879-43( )	.340±.005	.460±.005	1.083	
10-597878-44( )	10-597879-44( )	$.280^{+.000}_{-.015}$	.782±.005	1.405	
10-597878-45( )	10-597879-45( )	$1.450^{+.000}_{-.015}$	2.167±.003	2.790	
10-597878-46( )	10-597879-46( )	.520±.005	.833±.002	1.456	
10-597878-47( )	10-597879-47( )	.600±.003	.700±.003	1.323	II
10-597878-48( )	10-597879-48( )	$.280^{+.000}_{-.015}$	.550±.005	1.173	I
10-597878-49( )	10-597879-49( )	.280±.005	.805±.005	1.428	
10-597878-50( )	10-597879-50( )	.257±.005	.503±.005	1.126	

ASEEMBLY NUMBER	BODY	F	L	(M)	TYPE
10-597878-51( )	10-597879-51( )	$.280^{+.000}_{-.015}$	.715±.005	1.338	I
10-597878-52( )	10-597879-52( )	.580±.003	.830±.005	1.453	
10-597878-53( )	10-597879-53( )	$.460^{+.000}_{-.015}$	.965±.003	1.588	
10-597878-54( )	10-597879-54( )	.479±.005	1.054±.005	1.677	II
10-597878-55( )	10-597879-55( )	.750±.005	1.060±.005	1.683	
10-597878-56( )	10-597879-56( )	.800±.005	.986±.005	1.609	
10-597878-57( )	10-597879-57( )	$.280^{+.000}_{-.015}$	.420±.003	1.043	I
10-597878-58( )	10-597879-58( )	.637±.003	1.075±.004	1.698	II
10-597878-59( )	10-597879-59( )	$.460^{+.000}_{-.015}$	.850±.005	1.473	I
10-597878-60( )	10-597879-60( )	.600±.005	.938±.005	1.561	
10-597878-61( )	10-597879-61( )	.410±.003	.690±.003	1.313	II
10-597878-62( )	10-597879-62( )	.438±.005	.754±.003	1.377	
10-597878-63( )	10-597879-63( )	$.280^{+.000}_{-.015}$	.825±.005	1.448	I
10-597878-64( )	10-597879-64( )	.590±.005	.901±.005	1.524	
10-597878-65( )	10-597879-65( )	.460±.005	.915±.005	1.538	
10-597878-66( )	10-597879-66( )	.460±.005	.645±.003	1.268	
10-597878-67( )	10-597879-67( )	.280±.005	1.015±.005	1.638	
10-597878-68( )	10-597879-68( )	.735±.005	1.169±.005	1.792	
10-597878-69( )	10-597879-69( )	.376±.005	.995±.005	1.618	

9

9

NOTES: SEE SHEET 1

THE USE OF THIS DOCUMENT IS UNLIMITED.
HOWEVER, DOCUMENTS REFERENCED HEREON
MAY CONTAIN LIMITED RIGHTS DATA.

IMAGED / Apr . 19 2016, 11:54:03 AM

ASSEMBLY NUMBER	BODY	F	L	(M)	TYPE
10-597878-70( )	10-597879-70( )	.665±.002	.921±.002	1.544	II
10-597878-71( )	10-597879-71( )	.460±.005	.655±.003	1.278	I
10-597878-72( )	10-597879-72( )	.515±.003	.830±.005	1.453	II
10-597878-73( )	10-597879-73( )	.455±.005	.603±.003	1.226	
10-597878-74( )	10-597879-74( )	.984±.005	1.215±.005	1.838	
10-597878-75( )	10-597879-75( )	.279±.005	.754±.003	1.377	I
10-597878-76( )	10-597879-76( )	.381±.005	.645±.003	1.268	
10-597878-77( )	10-597879-77( )	.555±.005	.840±.005	1.463	II
10-597878-78( )	10-597879-78( )	.690±.005	1.260±.005	1.883	I
10-597878-79( )	10-597879-79( )	.607±.005	.895±.005	1.518	
10-597878-80( )	10-597879-80( )	$.685^{+.000}_{-.015}$	.915±.003	1.538	II
10-597878-81( )	10-597879-81( )	.270±.005	.645±.005	1.268	I
10-597878-82( )	10-597879-82( )	.722±.005	.952±.003	1.575	II
10-597878-83( )	10-597879-83( )	.900±.005	1.365±.005	1.988	II
10-597878-84( )	10-597879-84( )	.447±.003	.868±.003	1.491	II
10-597878-85( )	10-597879-85( )	$.325^{+.000}_{-.015}$	.692±.005	1.315	I
10-597878-86( )	10-597879-86( )	$.280^{+.000}_{-.015}$	.675±.005	1.298	I
10-597878-87( )	10-597879-87( )	.710±.003	.910±.005	1.533	II
10-597878-88( )	10-597879-88( )	$.280^{+.000}_{-.015}$	.465±.003	1.088	I
10-597878-89( )	10-597879-89( )	.732±.005	.950±.005	1.573	I

9

ASSEMBLY NUMBER	BODY	F	L	(M)	TYPE
10-597878-90( )	10-597879-90( )	$.280^{+.000}_{-.015}$	.530±.003	1.153	I
10-597878-91( )	10-597879-91( )	.608±.005	.978±.005	1.601	I
10-597878-92( )	10-597879-92( )	$.280^{+.000}_{-.015}$	.612±.003	1.235	I
10-597878-93( )	10-597879-93( )	$.460^{+.000}_{-.015}$	.845±.005	1.468	I
10-597878-94( )	10-597879-94( )	.280±.005	.627±.003	1.250	I
10-597878-95( )	10-597879-95( )	$.460^{+.000}_{-.015}$	.895±.005	1.518	I
10-597878-96( )	10-597879-96( )	.410±.003	.698±.003	1.319	I
10-597878-97( )	10-597879-97( )	.415±.007	.795±.003	1.416	I
10-597878-98( )	10-597879-98( )	.275±.003	.568±.005	1.189	I
10-597878-99( )	10-597879-99( )	.735±.005	1.067±.005	1.688	I
10-597878-100( )	10-597879-100( )	.415±.007	.900±.003	1.521	I
10-597878-101( )	10-597879-101( )	$.486^{+.000}_{-.015}$	1.142±.005	1.763	I
10-597878-102( )	10-597879-102( )	$.280^{+.000}_{-.015}$	.660±.002	1.281	I
10-597878-103( )	10-597879-103( )	$.460^{+.000}_{-.015}$	1.000±.005	1.621	I

9

NOTES: SEE SHEET 1

THE USE OF THIS DOCUMENT IS UNLIMITED.
HOWEVER, DOCUMENTS REFERENCED HEREON
MAY CONTAIN LIMITED RIGHTS DATA.

IMAGED / Apr . 19 2016, 11:54:03 AM