Alle Rechte vorbehalten/ *All rights reserved*

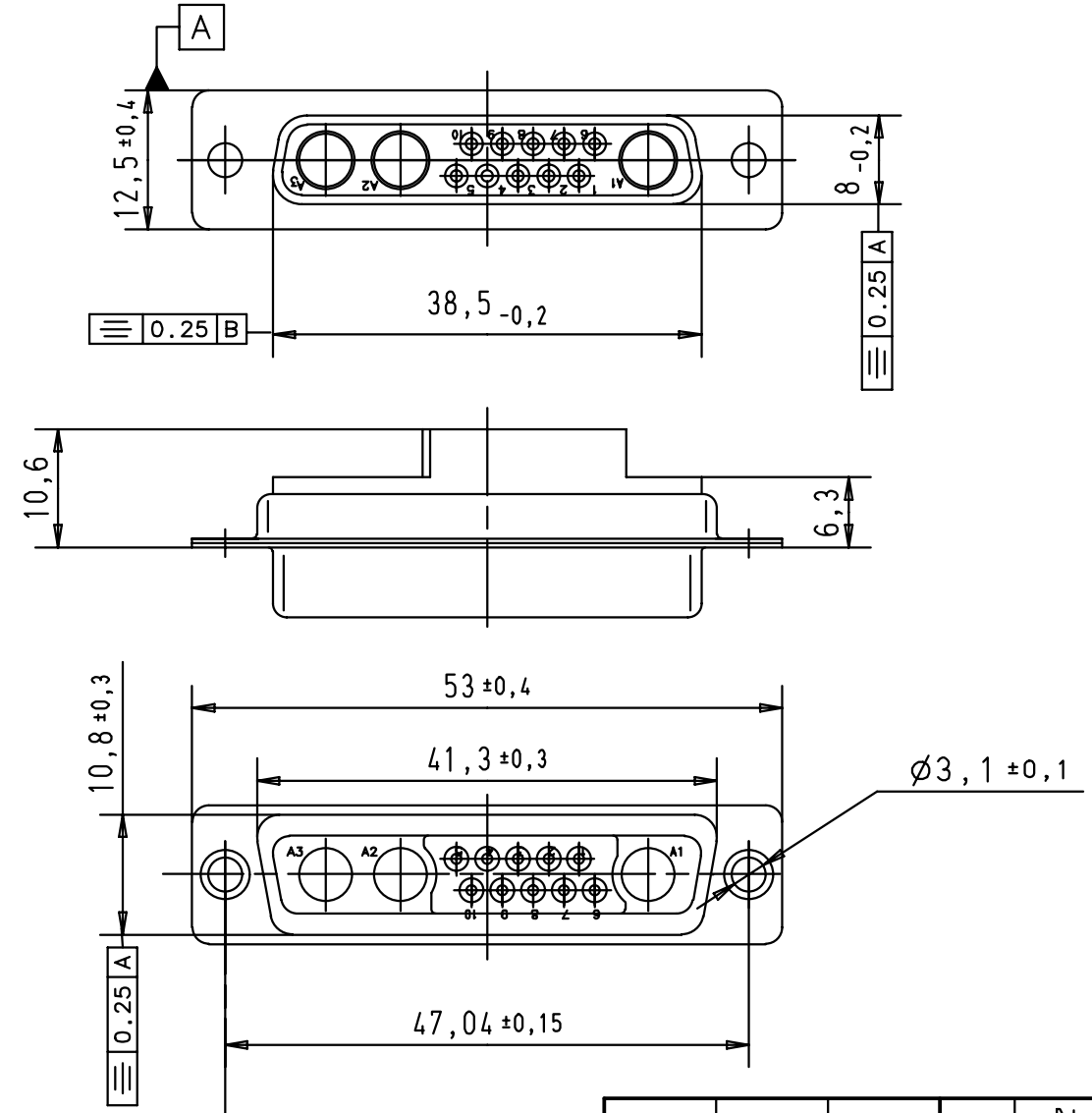

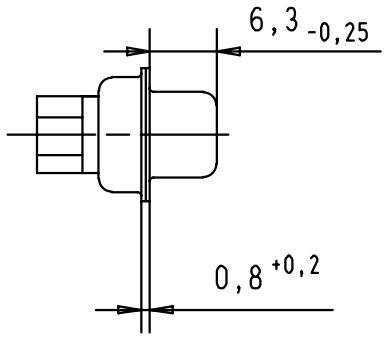

				Dat.	Name			Maßstab/ *Scale*
			Detail.	12/12/01	S.H.	All Dim. in mm Orig. Size DIN A 4	D-Sub , female, straight 13W3, without contact, Tin plated shell	1.5/1
			Insp.					
			Stand.					
29741	12/12/01	S.H.	HARTING ELEKTRONIK F-95972 Paris				TB 09 69 302 0133	Blatt/ *Page*
Mod.	Dat.	Name					Sub.	