THIS DRAWING IS UNPUBLISHED. RELEASED FOR PUBLICATION 20
© COPYRIGHT 20 BY TYCO ELECTRONICS CORPORATION. ALL RIGHTS RESERVED.

PART NUMBER	REV	TERMINATOR	FEED TYPE	DESCRIPTION
1339827-1	A	BENCH & LEADMAKER	MECH POST FEED	HDI APPLICATOR
7-1339827-1	A	BENCH & LEADMAKER	MECH POST FEED	-1 AND SPARE PARTS
7-1339827-7	A	-	-	SPARE PARTS KIT

SET UP GAGE 458638-3

LOC	DIST
A	66

REVISIONS

P	LTR	DESCRIPTION	DATE	DWN	APVD
	A	SEE ECO-08-010108	23APR2008	LJL	MC

CRIMP DATA ESCUBEDO TERMINAL ESCUBEDO CRIMP SPECS 5

TERMINAL NAME: RECEPTACLE SERIES 6.3 TP

CRIMP	SIZE	TYPE	RANGE
WIRE	2.97 [.117 IN]	F	1.00-2.50mm² 6
INSUL	4.06 [.160 IN]	F	3.00-4.30 [.118-.169 IN] 6

WIRE STRIP LENGTH 5.00-6.00 [.197-.236 IN]

APPL INSTRUCTIONS 408-8323

TERMINAL APPL SPEC: ESCUBEDO DATA SHT 4832.24 -

FEED 21.40 [.843 IN]

TERMINALS APPLIED

TE TERM PN	MANUF TERM PN	TE TERM PN	MANUF TERM PN
1949640-1	4832.00	1949640-7	4832.32
1949640-2	4832.01	1949640-8	4832.70
1949640-3	4832.02	1949640-9	4832.50
1949640-4	4832.24	1-1949640-0	4832.51
1949640-5	4832.30	1-1949640-1	4832.52
1949640-6	4832.31		

WIRE SIZE	CRIMP HEIGHT	PIN PN & LENGTH [IN]
2.50mm²	2.16 ±0.05 [.085 ±.002 IN]	5-354778-5 [.2770]
2.00mm²	2.06 ±0.05 [.081 ±.002 IN]	6-354778-1 [.2800]
1.50mm²	1.99 ±0.05 [.078 ±.002 IN]	6-354778-5 [.2820]
1.00mm²	1.78 ±0.05 [.070 ±.002 IN]	8-354778-1 [.2900]
-	-	
-	-	
-	-	
-	-	
-	-	
-	-	
-	-	
-	-	

1. RECOMMENDED SPARE PARTS
2. GREASE RAM, CAM, CAM FOLLOWER AND FEED ROD LIGHTLY.
3. CERTAIN TERMINALS REQUIRE LUBRICATION. REFER TO THE APPLICATOR INSTRUCTION SHEET FOR MORE INFORMATION.
4. LUBRICATE DAILY PER THE APPLICATOR INSTRUCTION SHEET SUPPLIED WITH THE APPLICATOR.
5. CRIMP DATA SUPPLIED BY THE TERMINAL MANUFACTURE.
6. WIRE AND INSULATION RANGES ARE THAT OF THE TERMINAL.
7. CUT TO LENGTH AT ASSEMBLY.

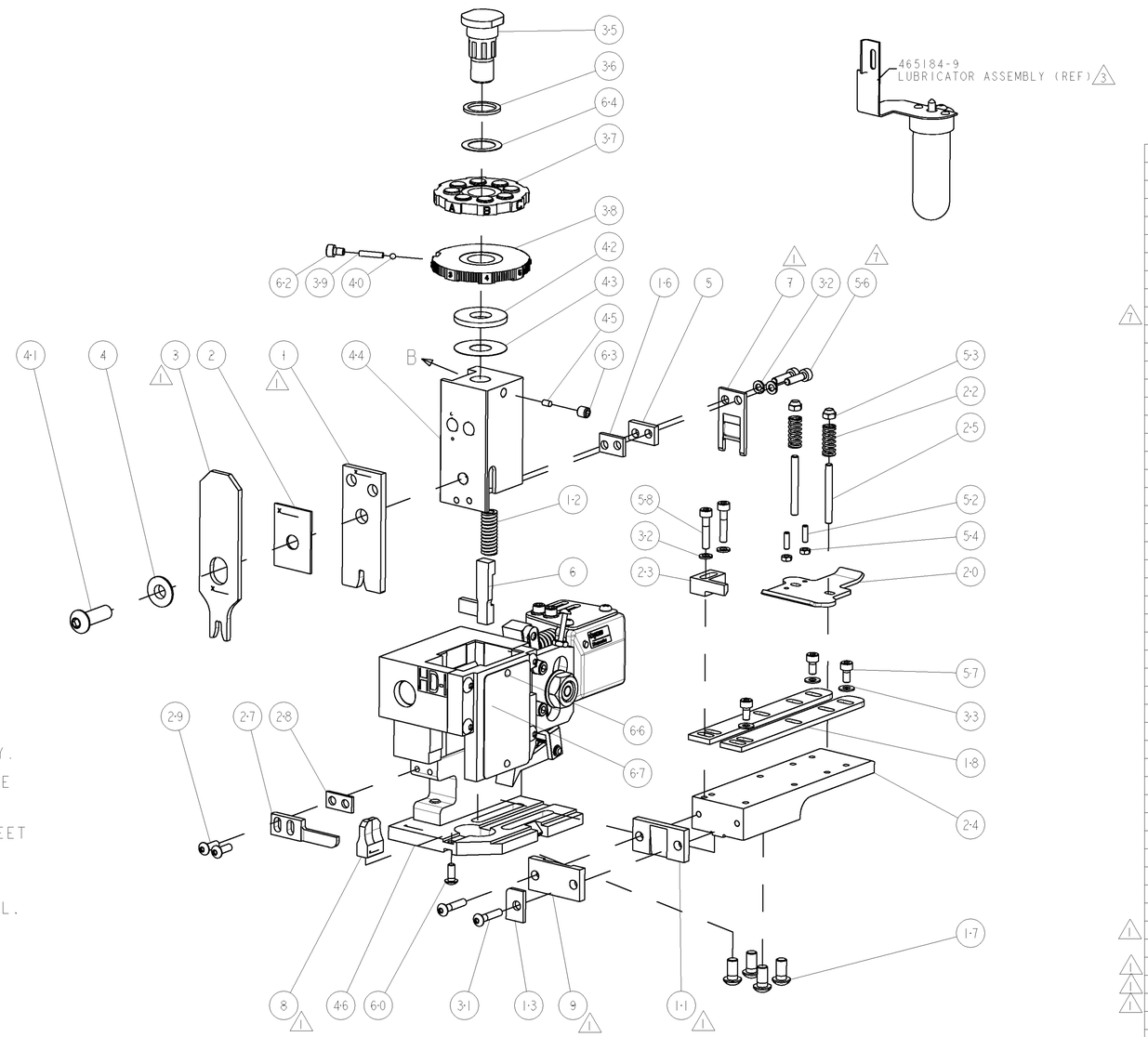

-	1	1	1338705-2	DOCUMENTATION PACKAGE	71
-	1	1	461264-1	PLATE, IDENTIFICATION	67
-	2	2	21017-2	SCREW, DRIVE	66
-	1	1	986950-1	WASHER, FLAT PRECISION	64
-	1	1	3-18031-0	SCR, SET, CUP POINT M6 X 6.0	63
-	1	1	18023-9	SCR, SKT HD CAP M4 X 6.0	62
-	1	1	18024-7	SCR, BTN SKT HD CAP (M4 X 10.0)	60
-	2	2	1-18023-4	SCR, SKT HD CAP M4 X 20.0	58
-	3	3	1-18023-0	SCR, SKT HD CAP M4 X 8.0	57
7 -	2	2	1-18023-3	SCR, SKT HD CAP M4 X 16.0	56
-	2	2	18029-1	NUT, HEX, REG M3	54
-	2	2	986965-1	NUT, LOCK, HEX, TORQUE (M4)	53
-	2	2	2-18032-2	SCR, SET, FLT POINT M3 X 10.0	52
-	1	1	18024-3	SCR, BTN SKT HD CAP (M3 X 10.0)	49
-	1	1	1338676-1	CAM, UNIVERSAL POST-FEED	47
-	1	1	1338662-1	SUB ASSY, APPLICATOR FRAME	46
-	1	1	690191-1	PLUG,NYLON	45
-	1	1	1320998-1	RAM	44
-	1	1	690125-1	SHIM SUB-ASSY	43
-	1	1	690124-1	WASHER, RAM (.115)	42
-	1	1	2-18024-6	SCR, BTN SKT HD CAP (M8 X 25.0)	41
-	1	1	23241-1	BALL, STEEL	40
-	1	1	2-22278-7	SPRING, COMPRESSION	39
-	1	1	1320922-1	DISC, ADJUST, INSULATION CRIMP	38
-	1	1	354777-1	WIRE DISC, ASSEMBLY	37
-	1	1	22480-5	SPRING, COMPRESSION	36
-	1	1	690212-1	POST, RAM	35
-	3	3	18027-2	WASHER, FLAT, REG M4	33
-	4	4	18025-2	WASHER, SPRG LOCK, REG M4	32
-	2	2	1-18024-0	SCR, BTN SKT HD CAP (M4 X 20.0)	31
-	2	2	18024-8	SCR, BTN SKT HD CAP (M4 X 12.0)	29
-	1	1	3-690451-2	SPACER, STRIPPER	28
-	1	1	240639-1	STRIPPER (MACHINING)	27
-	2	2	1320906-1	STUD, THREADED	25
-	1	1	1320995-1	PLATE, STRIP GUIDE	24
-	1	1	240825-1	PLATE, STRIP HOLD DOWN	23
-	2	2	4-22281-1	SPRING, DRAG	22
-	1	1	1338665-1	DRAG	20
-	2	2	1338663-6	GUIDE, LOWER STRIP	18
-	4	4	1-18024-8	SCR, BTN SKT HD CAP (M6 X 12.0)	17
-	1	1	1338708-1	SPACER, SLUG BLADE	16
-	1	1	690481-3	SPACER, HOLD DOWN	13
-	1	1	23846-1	SPRING, DIE	12
1 -	1	1	240644-9	PLATE, REAR SHEAR	11
-	-	-	-	-	10
1 -	1	1	5-690482-9	PLATE, FRONT SHEAR	9
1 1	2	1	3-1633384-9	ANVIL, COMBINATION	8
1 -	1	1	690474-3	BLADE, SLUG	7
-	1	1	3-455892-2	HOLD DOWN, TERMINAL	6
-	1	1	2-240641-4	SPACER	5
-	1	1	238009-1	BLOCK, FL CRIMPER SPACER	4
1 1	2	1	9-1213077-4	CRIMPER, INSULATION PREMIUM	3
-	1	1	1-455888-0	SPACER, CRIMPER	2
1 1	2	1	2-1633588-2	CRIMPER, WIRE	1
-77	-71	-1	PART NO	DESCRIPTION	ITEM NO

VIEW B ROTATED 180°

POST-FEED 40mm STROKE

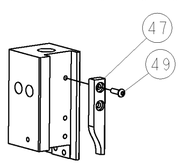

POST-FEED 30mm STROKE

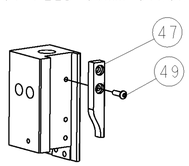

THIS DRAWING IS A CONTROLLED DOCUMENT OF TYCO ELECTRONICS CORPORATION. IT IS SUBJECT TO CHANGE WITHOUT NOTICE. QUESTIONS TO THE ORIGINATING ORGANIZATION SHOULD BE CONTACTED FOR THE LATEST REVISION.

DIMENSIONS: INCHES

TOLERANCES UNLESS OTHERWISE SPECIFIED:
0 PLC ±-
1 PLC ±0.1
2 PLC ±0.01
3 PLC ±0.001
4 PLC ±0.0001
ANGLES ±-

MATERIAL - -
FINISH - -

DWN 28FEB2008 L. LOFTHOUSE
CHK - -
APVD 28FEB2008 M.CLIFFORD
PRODUCT SPEC - -
APPLICATION SPEC - -
WEIGHT -

Tyco Electronics
Tyco Electronics
Harrisburg, PA 17105-3608

NAME END FEED HDI APPLICATOR - -

SIZE	CAGE CODE	DRAWING NO	RESTRICTED TO
A1	00779	C-1339827	-

CUSTOMER DRAWING SCALE 3:5 SHEET 1 OF 1 REV A

CUSTOMER VIEWABLE ASSEMBLY

AMP 4805 REV 31MAR2000

Pro/ENGINEER DRAWING