REV.	ECN NO.	DATE	SIGN	DESCRIPTION
B	LEN1830055	2018/02/26	Lingpeng	Change The Design
C	C190347	2019/03/12	Vicky	Change Note

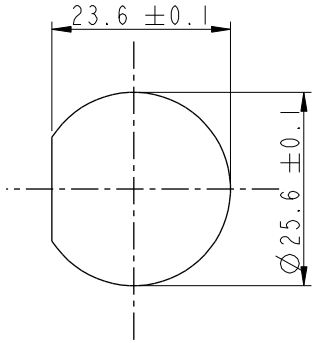

Recommended Panel Cut-Out

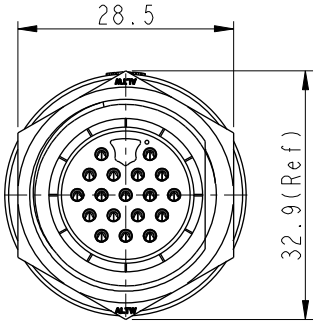

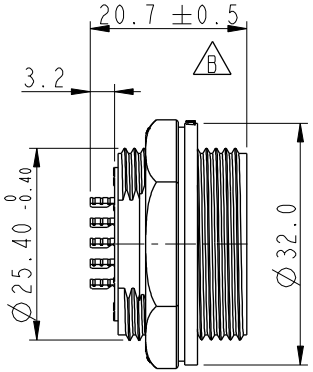

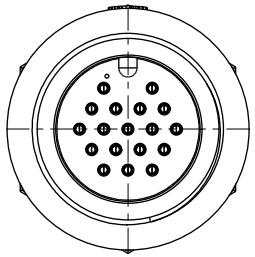

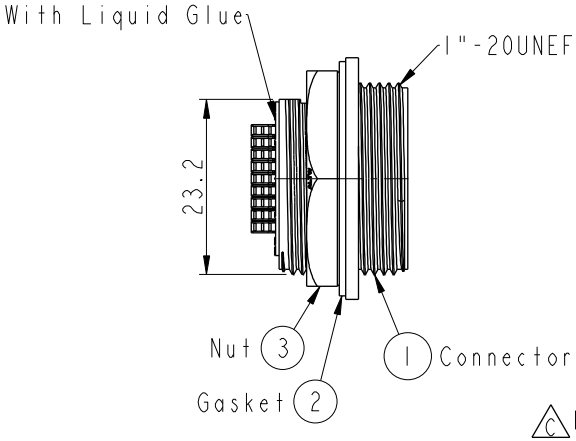

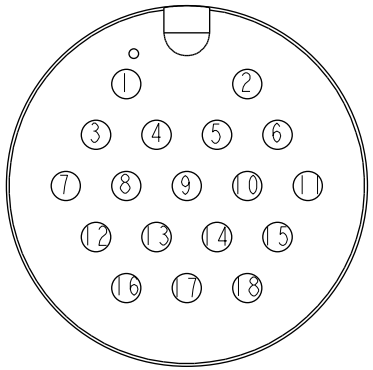

Pin Assignments Front View

ALTW
CONFIDENTIAL
2019-03-12
R&D DEPT.

C Note:
* QC Important Dimension To Check.
* Waterproof Rate: IP67, Unmated.
* Housing: Thermoplastic, Black.
* Pin: Copper Alloy, Gold Plated.
* Nut: Thermoplastic, Black.
* Gasket: Rubber, Gray.
* Maximum Panel Thickness:3.0mm
* Gasket and Nut are packed separately in PE bags.(Gasket/Nut不組裝，散裝出貨)

UNIT:mm

TOLERANCE
B ±0.5mm

TITLE	LARGE PANEL SCREW 18P M CONN M PIN		
SCALE 1:1	SIZE A4	SHEET 1 OF 1	
REV. C	WC-REV. A.1	QC: Inspection item	

Amphenol LTW
安費諾亮泰企業股份有限公司

ITEM NO ADD-18RMMS-SC7001	DRAWN BY Vicky	DATE 2019-03-12
DWG NO ADD-18RMMS-SC7001	CHECKED BY Rita	DATE 2019-03-12
CUSTOMER ALTW	APPROVED BY Max	DATE 2019-03-12

W10814-03-RM01A2

THIS DOCUMENT IS SUBJECT TO CHANGE WITHOUT NOTICE. IT IS CONFIDENTIAL AND A PROPERTY OF Amphenol LTW. DISCLOSURE TO THIRD PARTY HAS TO BE AUTHORIZED BY Amphenol LTW.