SCALE 2:1

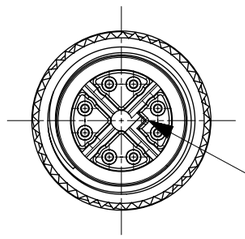

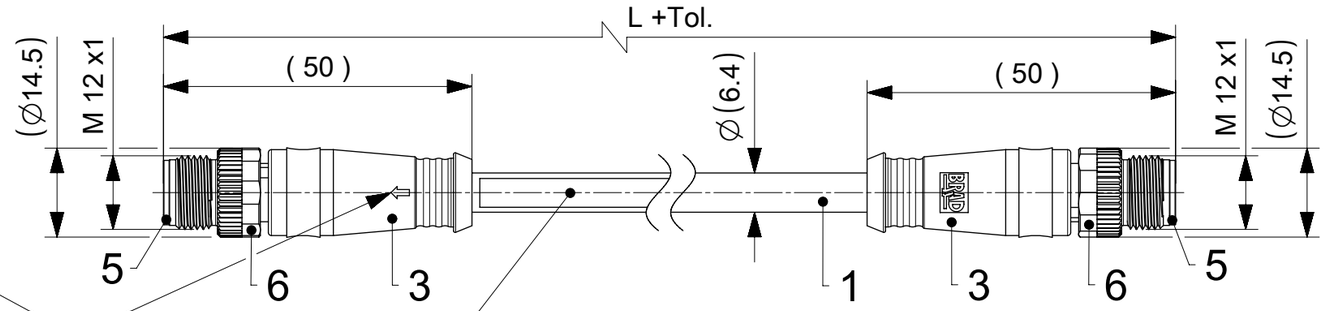

SCALE 2:1

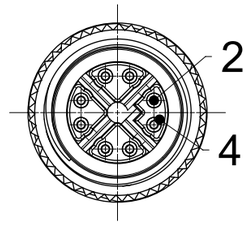

The Arrow of the coding
(Inline with the coding)
of M12 connector
Brad Logo on the Opposite Side

CABLE PRINT:
[MOLEX ETHERNET CABLE CAT6A 4x2x26] [MX PN] [(MX OLD ENG NO)] [DATE CODE] according to WN-00001
i.e. MOLEX ETHERNET CABLE CAT6A 4x2x26 1203410300 (E22E06020M005) MX1922

WIRING DIAGRAM

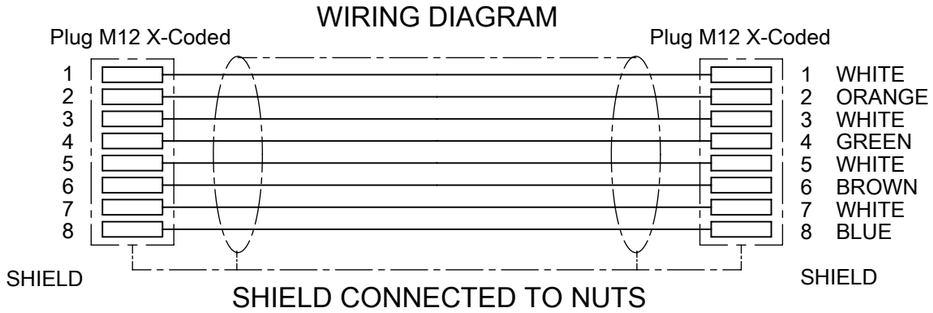

Connector Pin Assignment
Plug M12 X-Coded
Pin Side View

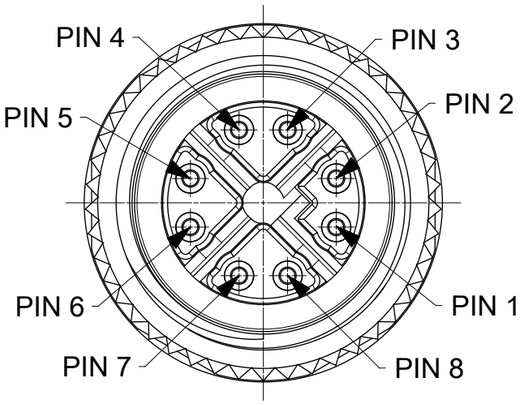

SCALE 4:1

Wiring Scheme
PLUG M12 XC
1 White
2 Orange
3 White
4 Green
5 White
6 Brown
7 White
8 Blue

Technical data:

M12 X-Coded CAT6 8P Cordset AWG26 straight blue inline 360° shielded.

Poles:	8
Max. Voltage:	48V
Max. Current:	0.5A
Contact resistance:	<5mOhm
Insulation withstand:	>100MOhm
Protection:	IP67
Temperature range:	-40°C to 70°C
Transmission characteristics (category):	$CAT6_A$

Product specification see: PS-120341-001

Packaging:
The cordsets are packed in a polybag.

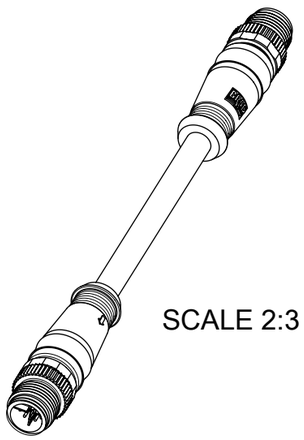

SCALE 2:3

TABLE 1

MOLEX PN	ENGINEERING NO.	DESCRIPTION	L [mm]
1203410300	E22E06020M005	M12 CAT6A M/M ST/ST PUR BLUE	500
1203410301	E22E06020M010	M12 CAT6A M/M ST/ST PUR BLUE	1000
1203410302	E22E06020M020	M12 CAT6A M/M ST/ST PUR BLUE	2000
1203410303	E22E06020M030	M12 CAT6A M/M ST/ST PUR BLUE	3000
1203410304	E22E06020M040	M12 CAT6A M/M ST/ST PUR BLUE	4000
1203410305	E22E06020M050	M12 CAT6A M/M ST/ST PUR BLUE	5000
1203410306	E22E06020M100	M12 CAT6A M/M ST/ST PUR BLUE	10000
1203410307	E22E06020M150	M12 CAT6A M/M ST/ST PUR BLUE	15000
1203410308	E22E06020M200	M12 CAT6A M/M ST/ST PUR BLUE	20000
1203410309	E22E06020M300	M12 CAT6A M/M ST/ST PUR BLUE	30000
1203410310	E22E06020M400	M12 CAT6A M/M ST/ST PUR BLUE	40000
1203410311	E22E06020M250	M12 CAT6A M/M ST/ST PUR BLUE	25000
1203410313	E22E06020M015	M12 CAT6A M/M ST/ST PUR BLUE	1500
1203410371	E22E06020M500	M12 CAT6A M/M ST/ST PUR BLUE	50000
1203410372	E22E06020M600	M12 CAT6A M/M ST/ST PUR BLUE	60000
1203410373	E22E06020M700	M12 CAT6A M/M ST/ST PUR BLUE	70000
1203410374	E22E06020M080	M12 CAT6A M/M ST/ST PUR BLUE	8000
1203410375	E22E06020M120	M12 CAT6A M/M ST/ST PUR BLUE	12000
1203410376	E22E06020M180	M12 CAT6A M/M ST/ST PUR BLUE	18000
1203410377	E22E06020M220	M12 CAT6A M/M ST/ST PUR BLUE	22000
1203410378	E22E06020M350	M12 CAT6A M/M ST/ST PUR BLUE	35000
1203410379	E22E06020M450	M12 CAT6A M/M ST/ST PUR BLUE	45000
1203410380	E22E06020M550	M12 CAT6A M/M ST/ST PUR BLUE	55000
1203410381	E22E06020M650	M12 CAT6A M/M ST/ST PUR BLUE	65000
1203410385	E22E06020M005H	M12 CAT6A M/M ST/ST PUR BLUE	500
1203410386	E22E06020M010H	M12 CAT6A M/M ST/ST PUR BLUE	1000
1203410396	E22E06020M015H	M12 CAT6A M/M ST/ST PUR BLUE	1500
1203410387	E22E06020M020H	M12 CAT6A M/M ST/ST PUR BLUE	2000
1203410388	E22E06020M030H	M12 CAT6A M/M ST/ST PUR BLUE	3000
1203410389	E22E06020M040H	M12 CAT6A M/M ST/ST PUR BLUE	4000
1203410390	E22E06020M050H	M12 CAT6A M/M ST/ST PUR BLUE	5000
1203410391	E22E06020M100H	M12 CAT6A M/M ST/ST PUR BLUE	10000
1203410392	E22E06020M150H	M12 CAT6A M/M ST/ST PUR BLUE	15000
1203410393	E22E06020M200H	M12 CAT6A M/M ST/ST PUR BLUE	20000
1203410394	E22E06020M300H	M12 CAT6A M/M ST/ST PUR BLUE	30000
1203410395	E22E06020M400H	M12 CAT6A M/M ST/ST PUR BLUE	40000
1203410397	E22E06020M500H	M12 CAT6A M/M ST/ST PUR BLUE	50000
1203410398	E22E06020M600H	M12 CAT6A M/M ST/ST PUR BLUE	60000
1203410399	E22E06020M700H	M12 CAT6A M/M ST/ST PUR BLUE	70000
1203410823	E22E06020M340	M12 CAT6A M/M ST/ST PUR BLUE	34000
1203410859	E22E06020M070	M12 CAT6A M/M ST/ST PUR BLUE	7000

TABLE 2

CABLE LENGTH TOLERANCES	
LENGTH	TOLERANCE
0m-1m	+40 mm
>1m-5m	+60 mm
>5m-10m	+80 mm
>10m-20m	+140 mm
>20m-30m	+160 mm
>30m	+1% length

BOM

ITEM	QTY	DESCRIPTION	MATERIAL	FINISH
1	-	CABLE 4x2xAWG 26 BLUE	PUR	-
2	16	CONTACT 6 MALE	BRASS	GOLD OVER NICKEL
3	2	OVERMOLD BLACK	TPU	-
4	2	INSERT M12 CAT6A MALE 8P BLACK	PA6	-
5	2	SHELL M12 CAT6A	ZINC DIE-CAST	NICKEL PLATED
6	2	NUT M12 MALE	BRASS	NICKEL PLATED

DOCUMENT STATUS	P1	RELEASE DATE	2019/10/15 09:21:21

THIS DRAWING CONTAINS INFORMATION THAT IS PROPRIETARY TO MOLEX ELECTRONIC TECHNOLOGIES, LLC AND SHOULD NOT BE USED WITHOUT WRITTEN PERMISSION

SYMBOLS: E A = 0; E C = 0; E P = 0; S = 0; ▼ = 0; C = 0; ☒ = 0; ■ = 0; V = 0

DIMENSION UNITS: mm — SCALE: 1:1

GENERAL TOLERANCES (UNLESS SPECIFIED)

ANGULAR TOL	±	1.0 °
4 PLACES	±	
3 PLACES	±	
2 PLACES	±	0.05
1 PLACE	±	0.3
0 PLACES	±	0.5

DRAFT WHERE APPLICABLE MUST REMAIN WITHIN DIMENSIONS

CURRENT REV DESC: NEW P/N - 1203410859 ADDED IN TABLE 2, TOL. TABLE ADDED

EC NO: 625632
DRWN: MDHARMANTI 2019/10/10
CHK'D: RSILLER 2019/10/15
APPR: RSILLER 2019/10/15

INITIAL REVISION:
DRWN: FGAIK 2017/06/19
APPR: BBRAUCH 2017/06/21

THIRD ANGLE PROJECTION | DRAWING: A3-SIZE | SERIES: 120341

molex

CSE M12 CAT6A 8P XC MA STR PUR XM DE

PRODUCT CUSTOMER DRAWING

DOCUMENT NUMBER	DOC TYPE	DOC PART	REVISION
1203410300	PSD	000	A5

MATERIAL NUMBER	CUSTOMER	SHEET NUMBER
SEE TABLE 1	GENERAL MARKET	1 OF 1

FORMAT: molex_tmpl_A3
REVISION: H
DATE: 2018/01/18