THIS DRAWING IS UNPUBLISHED. RELEASED FOR PUBLICATION -,- .
© COPYRIGHT - By - ALL RIGHTS RESERVED.

LOC	DIST
CM	0

REVISIONS

P	LTR	DESCRIPTION	DATE	DWN	APVD
	F	REVISED PER ECR-15-010337	23JUL2015	RK	SC

1. PINS TO COMPLY WITH AMP SOLDERABILITY SPEC. 108-11-3.
2. 0.00381 MIN MATTE TIN LEAD OVER 0.00127 MIN NICKEL.
3. 0.00076 MIN GOLD PLATE IN THE LOCALIZED PLATE AREA, 0.00381 MATTE TIN LEAD IN THE LOCALIZED PLATE AREA, BOTH OVER 0.00127 MIN NICKEL.
4. 0.00381 MIN MATTE TIN OVER 0.00127 MIN NICKEL.
5. 0.00076 MIN GOLD PLATE IN THE LOCALIZED PLATE AREA, 0.00381 MATTE TIN IN THE LOCALIZED PLATE AREA, BOTH OVER 0.00127 MIN NICKEL.

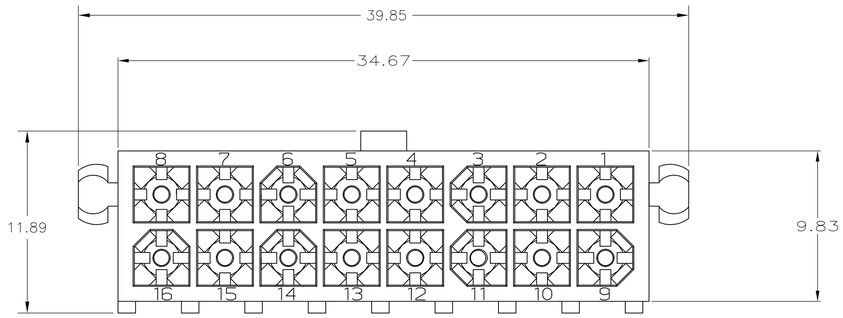

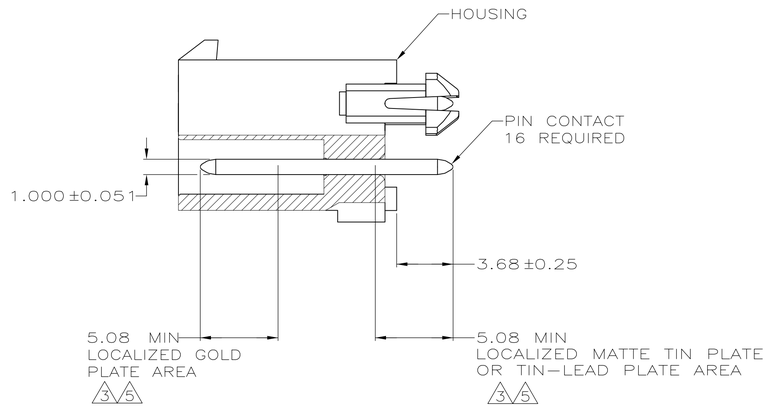

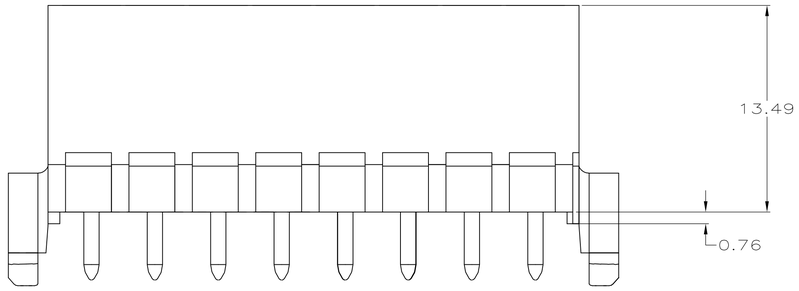

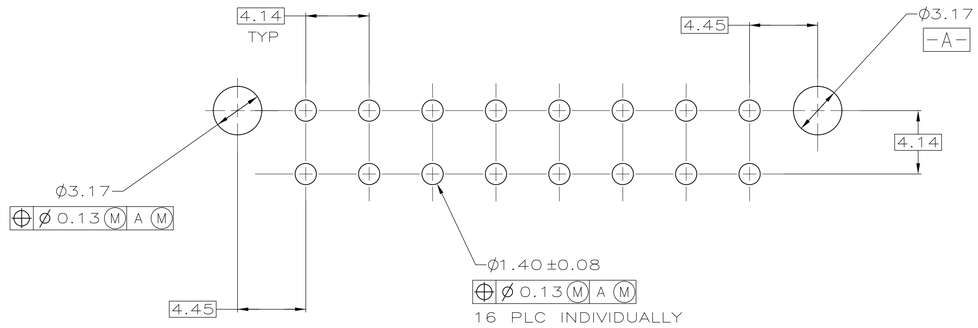

RECOMMENDED MOUNTING HOLE PATTERN
FOR 1.57 THICK P.C. BOARD

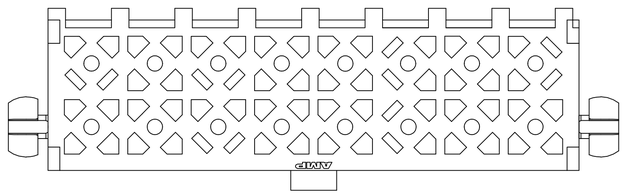

MATERIAL (PIN)	FINISH	MATERIAL (HOUSING)	COLOR	PART NO.
BRASS, GOLD	5	NYLON, UL94V-0	WHITE	1-794068-1
BRASS, TIN	4	NYLON, UL94V-0	WHITE	1-794068-0
BRASS, GOLD	3	NYLON, UL94V-0	WHITE	794068-2
BRASS, TIN-LEAD	2	NYLON, UL94V-0	WHITE	794068-1

THIS DRAWING IS A CONTROLLED DOCUMENT.

DIMENSIONS: mm

TOLERANCES UNLESS OTHERWISE SPECIFIED:
0 PLC ± -
1 PLC ± -
2 PLC ± 0.13
3 PLC ± -
4 PLC ± -
ANGLES ± -

MATERIAL -
FINISH -

DWN S CARPENTER 09JUN05
CHK R JONES 29JUL2003
APVD R JONES 29JUL2003
PRODUCT SPEC —
APPLICATION SPEC —
WEIGHT —

TE Connectivity

NAME: HEADER ASSEMBLY, 16 CKT, DOUBLE ROW VERTICAL, MINI UNIVERSAL MATE-N-LOK

SIZE	CAGE CODE	DRAWING NO	RESTRICTED TO
A1	00779	C-794068	—

CUSTOMER DRAWING | SCALE 5:1 | SHEET 1 OF 1 | REV F