THIS DRAWING IS UNPUBLISHED. RELEASED FOR PUBLICATION -,- .
© COPYRIGHT - By - ALL RIGHTS RESERVED.

REVISIONS					
P	LTR	DESCRIPTION	DATE	DWN	APVD
	A4	REVISED PER ECR-17-009545	14JUL2017	AS	RS

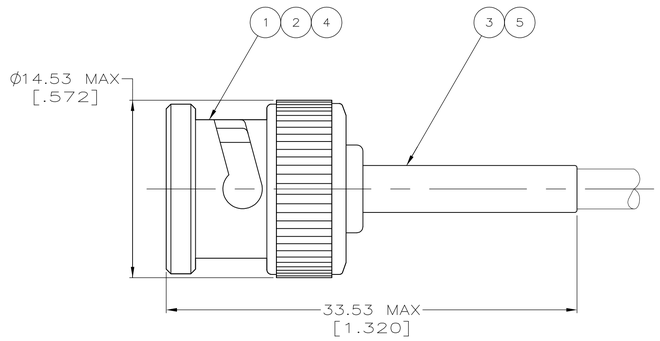

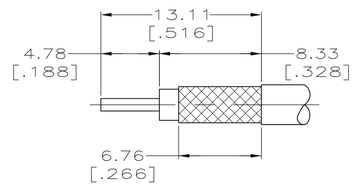

FIGURE 1

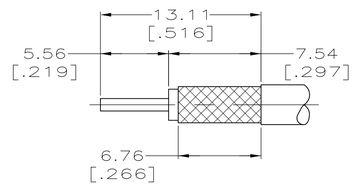

FIGURE 2

RECOMMENDED STRIP LENGTH

1. CABLE USED WITHOUT SPACER
2. CABLE USED WITH SPACER
3. SEE INSTRUCTION SHEET 408-9021
4. PARTS PACKAGED UNASSEMBLED
5. USE WITH PRO-CRIMPER 354940-1.
6. SPECIAL PACKAGING: INDIVIDUALLY PACKAGED IN PRE-PRINTED BAG WITH SPECIAL GRAPHICS
7. BULK KIT PACKAGING 25 PIECES
8. BULK KIT PACKAGING 100 PIECES
9. OBSOLETE PARTS: OBSOLETE CIS STREAMLINING PER D.RENAUD/D.SINISI

FOR USE WITH CABLE	PACKAGING	FERRULE HEX CRIMP HEIGHTS	CONTACT HEX CRIMP HEIGHTS	DIE SET 5	STRIP LENGTH	5 TUBING QTY=1	4 SPACER QTY=1	3 FERRULE QTY=1	2 CONTACT, PLUG QTY=1	1 PLUG ASSEMBLY QTY=1	PART NUMBER
JIS CABLE 3D-2V	1	5.41 [.213]	1.73 [.068]	58436-1	FIG 1	-	-	8-221132-9	1-222246-6	9-413636-3	3-5221128-1
BELDEN 9907, 89907 & RG-141/U	6	5.41 [.213]	1.73 [.068]	58436-1	FIG 1	-	-	9-221132-0	1-222246-6	9-413636-0	2-5221128-7
RG-179/U, 187/U	6	4.52 [.178]	1.73 [.068]	58436-3	FIG 1	227194-1	-	9-413658-0	1-222246-3	9-413636-2	2-5221128-3
RG-174/U, 188/U, 316/U	6	4.52 [.178]	1.73 [.068]	58436-3	FIG 1	227194-1	-	9-413658-0	1-222246-0	9-413636-2	2-5221128-1
9 OBSOLETE RG-59/U, 59A/U, 59B/U	6	6.48 [.255]	1.73 [.068]	58436-1	FIG 1	-	227423-1	9-221132-1	222246-6	9-413636-1	~~1-5221128-8~~
BELDEN 9266	6	6.48 [.255]	1.73 [.068]	58436-1	FIG 1	-	-	9-221132-1	222246-2	9-413636-1	1-5221128-7
2 RG-62/U, 62A/U, 62B/U	6	6.48 [.255]	1.73 [.068]	58436-1	FIG 2	-	227423-1	9-221132-1	222246-4	9-413636-1	1-5221128-1
1 RG-59/U, 59A/U, 59B/U	6	6.48 [.255]	1.73 [.068]		FIG 1						
RG-58/U, 58A/U, 58B/U, 58C/U	6	5.41 [.213]	1.73 [.068]	58436-1	FIG 1	-	-	9-221132-0	222246-2	9-413636-0	1-5221128-0
2 OBSOLETE RG-62/U, 62A/U, 62B/U	6	6.48 [.255]	1.73 [.068]	58436-1	FIG 2	-	227423-1	9-221132-1	222246-4	9-413636-1	~~5221128-2~~
1 OBSOLETE RG-59/U, 59A/U, 59B/U	6	6.48 [.255]	1.73 [.068]		FIG 1						
RG-58/U, 58A/U, 58B/U, 58C/U	6	5.41 [.213]	1.73 [.068]	58436-1	FIG 1	-	-	9-221132-0	222246-2	9-413636-0	5221128-1

THIS DRAWING IS A CONTROLLED DOCUMENT.

DIMENSIONS: mm [INCHES]

TOLERANCES UNLESS OTHERWISE SPECIFIED:
0 PLC ± -
1 PLC ± -
2 PLC ± 0.41 [.016]
3 PLC ± -
4 PLC ± -
ANGLES ± -

MATERIAL -
FINISH -

DWN J. ALCORTA - DOCK5 21APR2005
CHK J. HAVENER 21APR2005
APVD J. LIPPERT 21APR2005
PRODUCT SPEC —
APPLICATION SPEC —
WEIGHT 0.000000
CUSTOMER DRAWING

TE Connectivity

NAME PLUG, COMMERCIAL BNC

SIZE	CAGE CODE	DRAWING NO	RESTRICTED TO
A1	00779	C-5221128	—

SCALE 4:1 SHEET 1 OF 1 REV A4

4805 (1/15)