High Frequency Ceramic Solutions

862 - 928MHz, 2.4 - 2.5GHz Integrated Impedance-matched Balun Filter for Texas Instruments CC1352R and CC1352P **P/N: 0900PC15A0036**

Detail Specification: 11/16/2018

Do you need a small sub-GHz or 2.4GHz antenna? Go to: https://www.johansontechnology.com/antennas

General Specifications

Part Number	0900PC15A0036	
Frequency (MHz)	862 - 928	2400 - 2500
Insertion Loss (dB)	1.8 typ (2.0 max.)	1.3 typ (1.6 max.)
Return Loss (dB)	14 typ. (10 min.)	14 typ. (10 min.)
Phase Balance (deg)	180±15	180±15
Amplitude Difference (dB)	0.8 typ. (1.5 max.)	1.0 typ. (2.0 max.)
Attenuation (dB @MHz)	17 min. @1736 - 1856 40 min. @2604 - 2784	20 min. @4800 - 5000 40 min. @7200 - 7500
Unbalanced Impedance (Ω)	50	
Balanced Impedance (Ω)	Impedance matched to Texas Instruments CC1352R and CC1352P	
Power Capacity (W)	3 max. CW	
Operating Temperature	-40°C to +85°C	
Quantity/Reel	4,000	

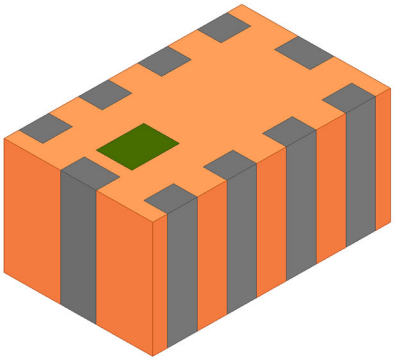

Recommended Storage Conditions for unused T&R product	+5 to +35°C Humidity 45 - 75%RH 18 months max.*

*18 months max. in vacuum sealed bag, 1 week once opened. Please see: https://www.johansontechnology.com/silverleads-profile

Part Number Explanation

P/N Suffix	**Packing Style**	Bulk	Suffix = S	eg. 0900PC15A0036S
		T & R	Suffix = E	eg. 0900PC15A0036E
		100% Tin	Suffix = None	eg. 0900PC15A0036(E or S)

For more Texas Instruments matched balun-filters, go to: https://www.johansontechnology.com/ti

Mechanical Dimensions

	In	mm
L	0.079 ± 0.008	2.00 ± 0.2
W	0.049 ± 0.008	1.25 ± 0.2
T	0.039 max.	1.00 max.
a	0.010 ± 0.004	0.25 ± 0.1
b	0.012 ± 0.006	0.30 ± 0.15
c	0.008 +0.004/-0.006	0.20 +0.1/-0.15
d	0.020 ± 0.004	0.50 ± 0.1

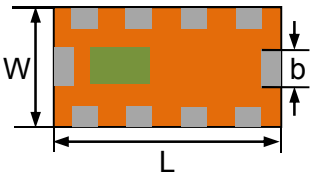

Top

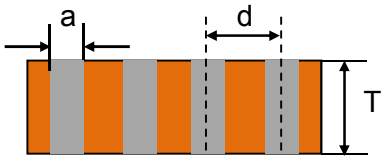

Side

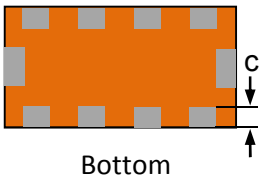

Bottom

Terminal Configuration

No.	Function	No.	Function
1	ANT (2.4GHz)	6	RF_N (Sub-GHz)
2	GND	7	RF_P (Sub-GHz)
3	GND	8	RF_N (2.4GHz)
4	ANT (Sub-GHz)	9	RF_P (2.4GHz)
5	RX_TX	10	GND

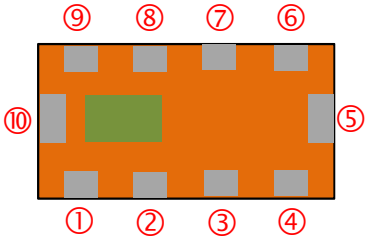

Johanson Technology, Inc. reserves the right to make design changes without notice.
All sales are subject to Johanson Technology, Inc. terms and conditions.

JOHANSON TECHNOLOGY

https://www.johansontechnology.com

4001 Calle Tecate • Camarillo, CA 93012 • TEL 805.389.1166 FAX 805.389.1821

2018 Johanson Technology, Inc. All Rights Reserved

Pad-Soldermask Guidelines

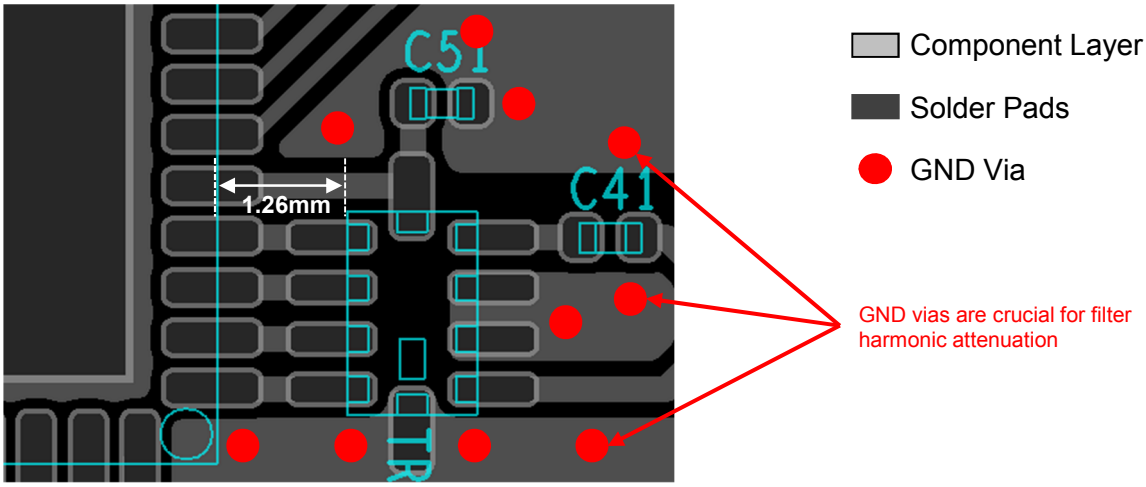

For reference design package and PCB CAD files
please contact us at: https://www.johansontechnology.com/ask-a-question

PCB Reference Design Schematic

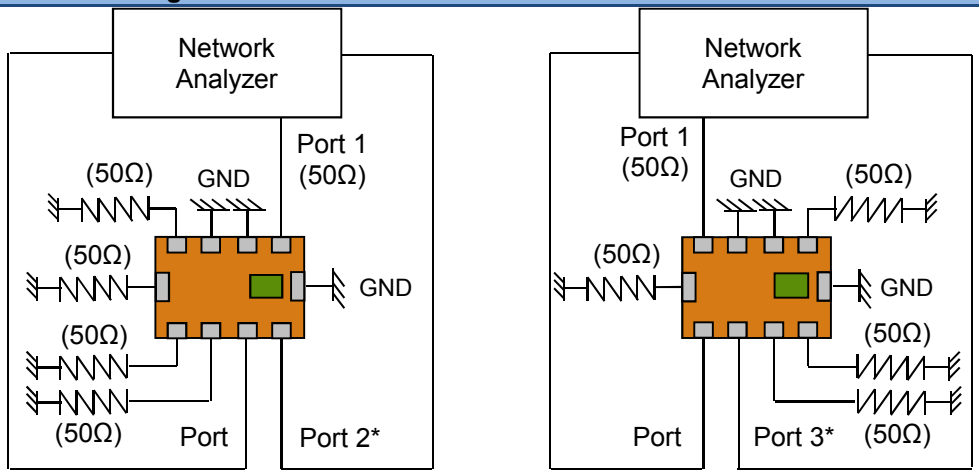

Port 1: Unbalanced Port, **Ports 2 and 3:** Balanced Port
*Impedance for ports 2 and 3 = Conjugate to Balanced Impedance/2

Johanson Technology, Inc. reserves the right to make design changes without notice.
All sales are subject to Johanson Technology, Inc. terms and conditions.

JOHANSON TECHNOLOGY

https://www.johansontechnology.com

4001 Calle Tecate • Camarillo, CA 93012 • TEL 805.389.1166 FAX 805.389.1821

2018 Johanson Technology, Inc. All Rights Reserved

Discrete Components Integrated into IPC

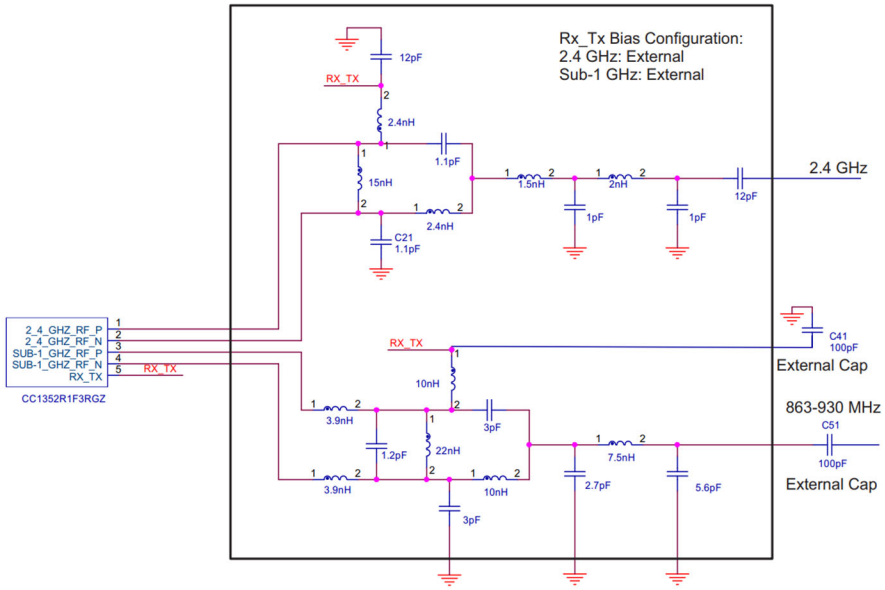

PCB Reference Design Schematic

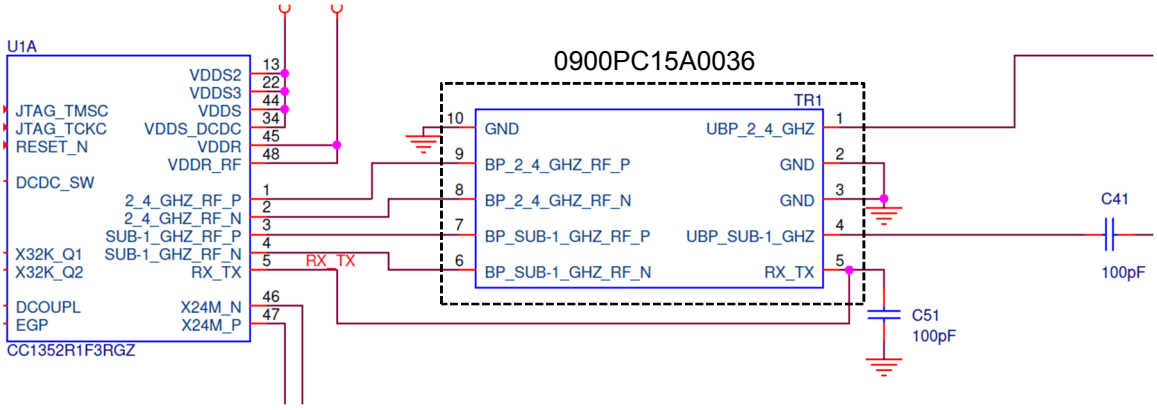

TI CC1352 RX_TX should be configured as external biasing for both Sub-GHz and 2.4GHz Rx operation

Johanson Technology, Inc. reserves the right to make design changes without notice.
All sales are subject to Johanson Technology, Inc. terms and conditions.

JOHANSON TECHNOLOGY

https://www.johansontechnology.com

4001 Calle Tecate • Camarillo, CA 93012 • TEL 805.389.1166 FAX 805.389.1821

2018 Johanson Technology, Inc. All Rights Reserved

Sub-GHz Electrical Characteristics at T=25°C

Insertion Loss, Attenuation

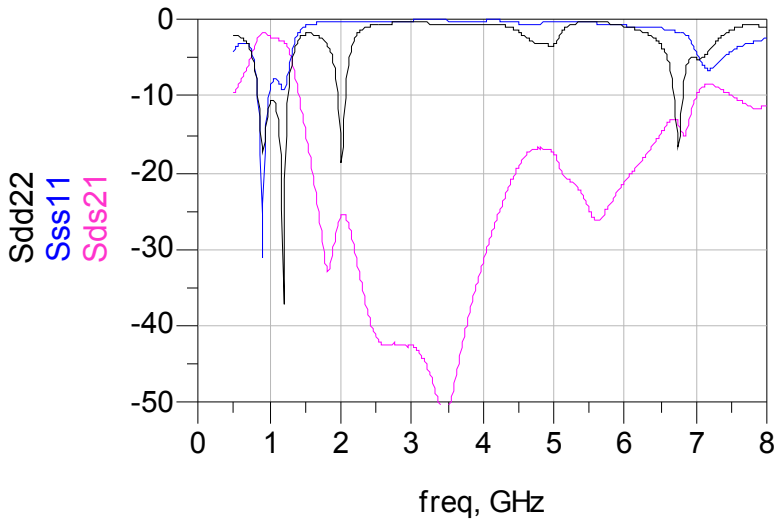

Phase Balance, Amplitude Difference

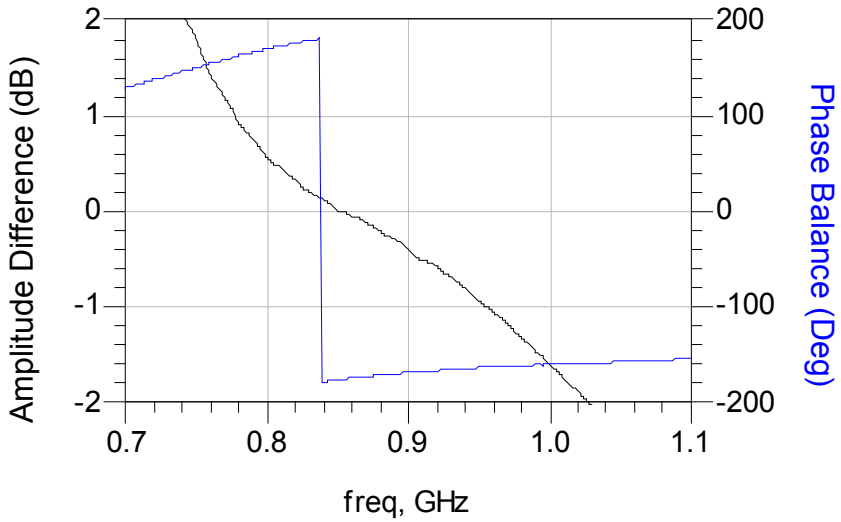

Johanson Technology, Inc. reserves the right to make design changes without notice.
All sales are subject to Johanson Technology, Inc. terms and conditions.

JOHANSON TECHNOLOGY

https://www.johansontechnology.com

4001 Calle Tecate • Camarillo, CA 93012 • TEL 805.389.1166 FAX 805.389.1821

2018 Johanson Technology, Inc. All Rights Reserved

2.4GHz Electrical Characteristics at T=25°C

Insertion Loss, Attenuation

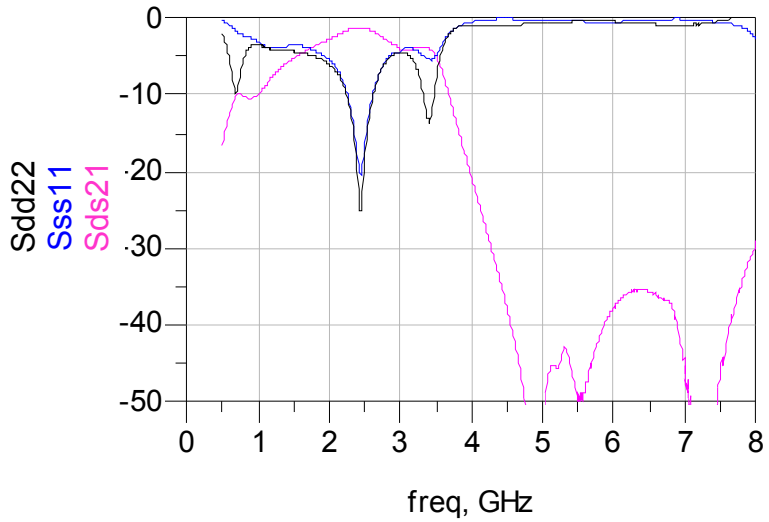

Phase Balance, Amplitude Difference

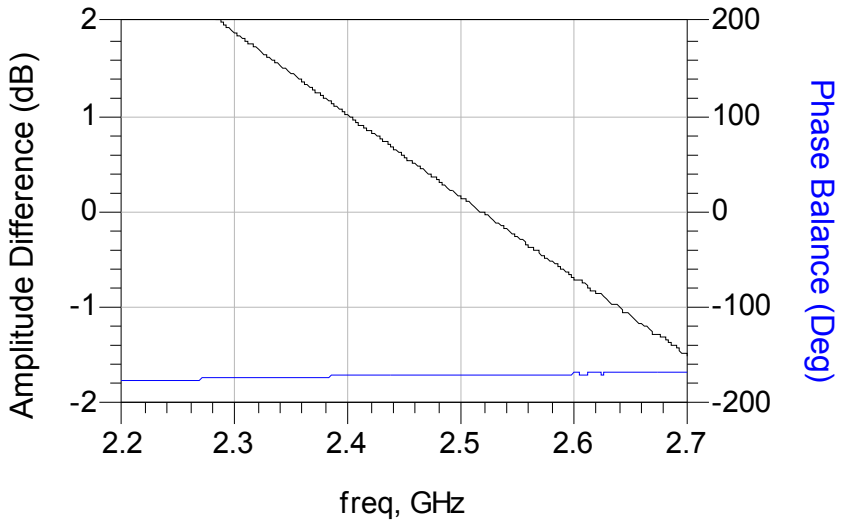

Johanson Technology, Inc. reserves the right to make design changes without notice.
All sales are subject to Johanson Technology, Inc. terms and conditions.

JOHANSON TECHNOLOGY

https://www.johansontechnology.com

4001 Calle Tecate • Camarillo, CA 93012 • TEL 805.389.1166 FAX 805.389.1821

2018 Johanson Technology, Inc. All Rights Reserved

Application Notes, Layout Files, and more
https://www.johansontechnology.com/ti

Small SMD 900MHz (or 2.4G, 5G) antennas at:
https://www.johansontechnology.com/antennas

RoHS Compliance
https://www.johansontechnology.com/rohs-compliance

Soldering Information
https://www.johansontechnology.com/ipcsoldering-profile

Antenna layout and tuning techniques
https://www.johansontechnology.com/tuning

Antenna layout review, tuning, and characterization services
https://www.johansontechnology.com/ipc-antenna-services

MSL Info
https://www.johansontechnology.com/msl-rating

Recommended Storage Condition and Max Shelf Life
https://www.johansontechnology.com/recommended-storage-conditions

Packaging information
https://www.johansontechnology.com/tape-reel-packaging

Silverleads Information
https://www.johansontechnology.com/silverleads-profile

Texas Instruments Application Note
https://www.ti.com/lit/an/swra629/swra629.pdf

Would you like us to review your layout for free? Need an embedded antenna recommendation for your application?
Contact us at:
https://www.johansontechnology.com/ask-a-question

Johanson Technology, Inc. reserves the right to make design changes without notice.
All sales are subject to Johanson Technology, Inc. terms and conditions.

JOHANSON TECHNOLOGY

https://www.johansontechnology.com

4001 Calle Tecate • Camarillo, CA 93012 • TEL 805.389.1166 FAX 805.389.1821

2018 Johanson Technology, Inc. All Rights Reserved