THIS DRAWING IS UNPUBLISHED. RELEASED FOR PUBLICATION -,- .
© COPYRIGHT - BY TYCO ELECTRONICS CORPORATION. ALL RIGHTS RESERVED.

LOC	DIST
AD	00

REVISIONS

P	LTR	DESCRIPTION	DATE	DWN	APVD
	O	REV PER EC 0S12-0091-05	24FEB05	BC	GS
	A	ECR-10-019054	15SEP10	DP	MQW

CONNECTOR ASSEMBLY EXAMPLARY LOADED (6)

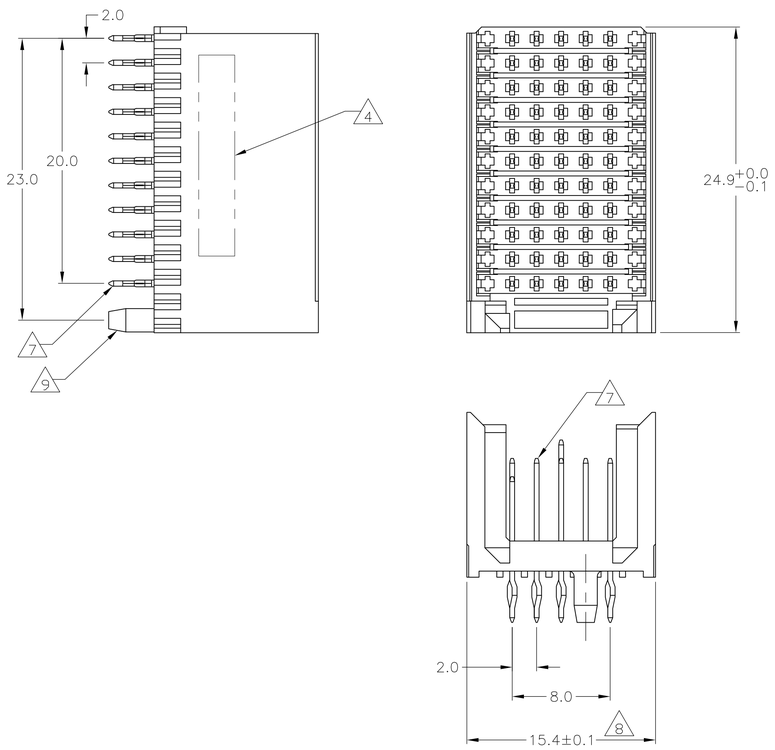

CONTACT DIMENSIONS

SCALE 5:1

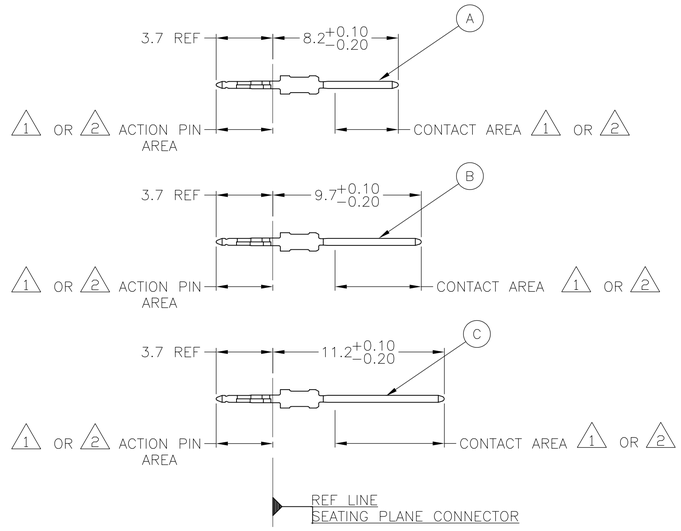

CONTACT LAYOUT

	z	a	b	c	d	e	f
1		A	B	B	B	B	
2		B	B	B	B	B	
3		B	B	B	B	B	
4		B	B	B	B	B	
5		B	B	B	B	B	
6		B	B	B	B	B	
7		B	B	B	B	B	
8		B	B	B	B	B	
9		B	B	C	B	B	
10		B	B	B	B	B	
11		A	B	B	B	B	

GUIDING

2. CONTACT FINISH:
   CONTACT AREA: 0.8µm MIN GOLD PER ASTM B488 OVER 1.3µm MIN NICKEL PER SAE-AMS-QQ-N-290.
   ACTION PIN: 0.5µm MIN TIN PER ASTM B545 OVER 1.3µm MIN NICKEL PER SAE-AMS-QQ-N-290.

3. MATERIAL:
   CONTACT: PHOSPHOR BRONZE.
   HOUSING: GLASS-FILLED POLYESTER.

4. CONNECTOR MARKED WITH PART NUMBER AND DATE CODE. ADDITIONAL CHARACTERS OR MARKINGS, AS WELL AS THE LOCATION OF THE MARKINGS, MAY BE ADDED FOR TRACEABILITY BASED UPON MANUFACTURERS DISCRETION.

5. PLATED-THROUGH HOLES AT 2x2mm SQUARE GRID PATTERN DEFINED BY CONTACT LAYOUT.

6. FOR ACTUAL PIN LOADING SEE "CONTACT LAYOUT".

7. FOR ACTUAL PIN DIMENSIONS SEE "CONTACT DIMENSIONS".

8. TO BE MEASURED AT BOTTOM OF SHROUD.

9. LOCATION PEG.

RECOMMENDED PCB-HOLE LAYOUT COMPONENT SIDE SHOWN

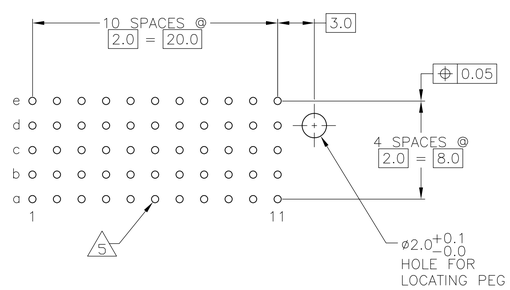

PLATED THRU HOLES PARAMETERS

REFERENCE APPLICATION SPECIFICATION

2	6645262-1
FINISH	PART NUMBER

THIS DRAWING IS A CONTROLLED DOCUMENT.

DIMENSIONS: mm

TOLERANCES UNLESS OTHERWISE SPECIFIED:
0 PLC ± –
1 PLC ± 0.2
2 PLC ± 0.02 ±0.2
3 PLC ± 0.005
4 PLC ± –
ANGLES ± 0°30'

MATERIAL (3)

FINISH: SEE TABLE

DWN	B.CARBO	24FEB05
CHK	G.SKIPPER	24FEB05
APVD	G.SKIPPER	24FEB05

PRODUCT SPEC: 108-19082
APPLICATION SPEC: 114-19029
WEIGHT: –

Tyco Electronics — Tyco Electronics Corporation, Harrisburg, Pa 17105-3608

NAME: MALE ASSEMBLY, Z-PACK 2mm HM, TYPE C

SIZE	CAGE CODE	DRAWING NO	RESTRICTED TO
A1	00779	C-6645262	–

CUSTOMER DRAWING | SCALE 4:1 | SHEET 1 OF 1 | REV A