THIS COPY IS PROVIDED ON A RESTRICTED BASIS AND IS NOT TO BE USED IN ANY WAY DETRIMENTAL TO THE INTERESTS OF PANDUIT CORP.

PANDUIT P/N	WEIGHT
RFX105-X	.098 LB/10 PCS. (44.5 G/10 PCS.)

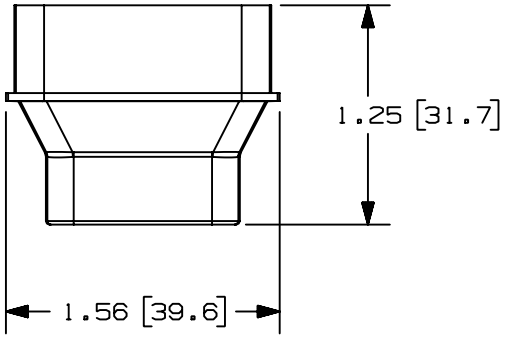

NOTES:
1. SEE CURRENT CATALOG FOR ADDITIONAL PART SUFFIXES TO INDICATE COLOR AND OR PACKAGE QUANTITY.
2. FOR USE IN POWER CABLING APPLICATIONS UP TO 600V OR FOR CATEGORY 5, FIBER OPTIC AND OTHER LOW VOLTAGE APPLICATIONS REQUIRING TAMPER-RESISTANCE.
3. DIMENSIONS IN PARENTHESIS ARE IN METRIC.

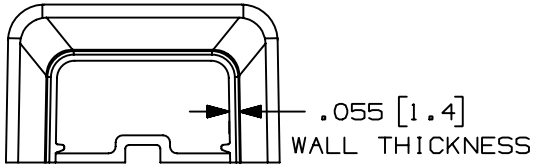

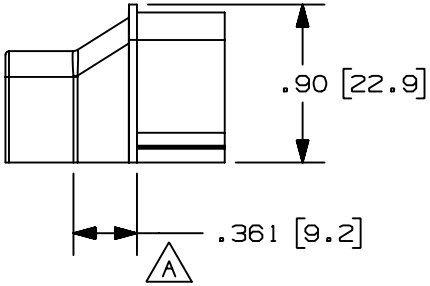

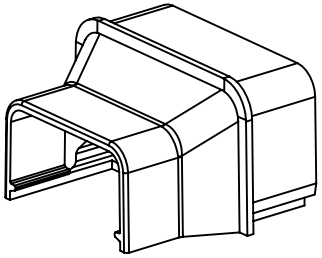

REV	DATE	BY	CHK	DESCRIPTION	ECN - R		CUST	SUP
2	08-11-97	RABO	HIW	B. CORRECTED DRAWING NUMBER MISTAKE MADE ON REVISION 1	35541-52	HIW	HIW	
1	07-31-97	RABO	HIW	A. ADDED DIMENSION .361 (9.2)	35541-52	HIW	HIW	
R	10-15-96	RABO	CEF	RELEASED TO PRODUCTION	35541-52	CEF	CEF	

CAD FILENAME/LAYERS: D35541CZ_RFX105_C_01A.PRT

PANDUIT CORP. TINLEY PARK, ILLINOIS

REDUCER FITTING (RFX105-X)
CUSTOMER DRAWING

UNLESS OTHERWISE SPECIFIED, DIMENSIONAL TOLERANCES ARE:
(.X) ± (.XXX) ± .010(.3)
(.XX) ± .3(.8) ANGLES ±

UNLESS OTHERWISE SPECIFIED, ALL DIMENSIONS ARE GIVEN IN INCHES, THIRD ANGLE PROJECTION.

DRAWN BY: PM
DATE: 10-15-96
CHK'D: CEF
MAT'L: ABS/POLYCARBONATE B
SCALE: FULL
DRAWING NO.: 35541-52
DWG SIZE: A