THIS DRAWING IS UNPUBLISHED. RELEASED FOR PUBLICATION -,- .
© COPYRIGHT - By - ALL RIGHTS RESERVED.

LOC	DIST
CM	53

REVISIONS

P	LTR	DESCRIPTION	DATE	DWN	APVD
	U2	REVISED PER ECR 12-013810	24SEPT12	JR	TM

1. PLATE OVERALL WITH 0.00127 [.000050] MIN NICKEL, THEN PLATE INSIDE OF WIRE BARREL AND ON TIP OF PIN WITH 0.00076 [.000030] MIN GOLD.
2. WIRE RANGE: 0.05 – 0.4 mm² [30 – 22 AWG].
3. INSULATION RANGE: 1.02–1.91 [.040–.075] DIA.
4. DIMENSIONS IN BRACKETS ARE IN INCHES.

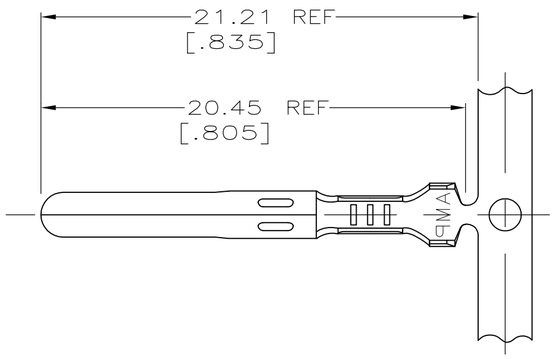

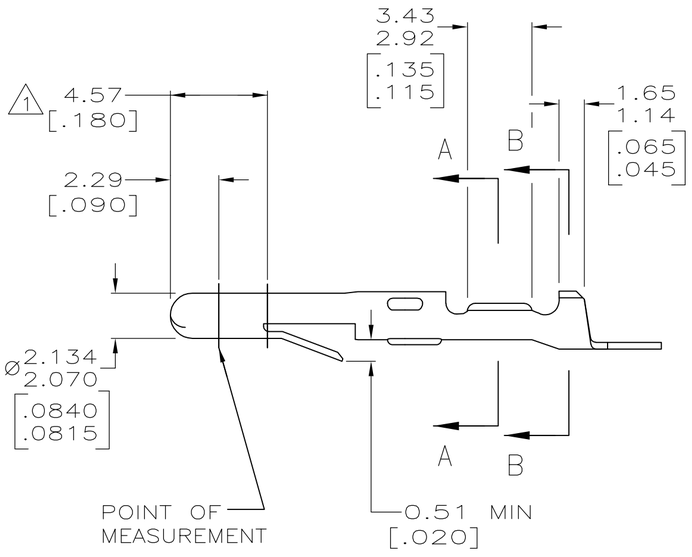

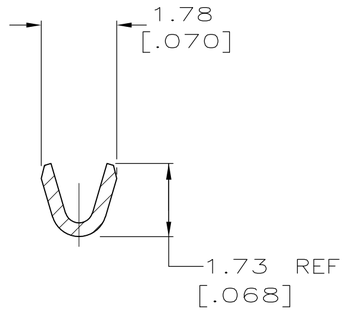

SECTION A–A
SCALE 10:1

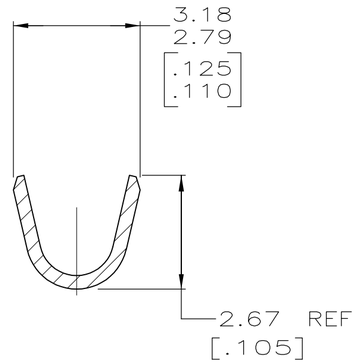

SECTION B–B
SCALE 10:1

1	0.30 [.012] BRASS	350079-5
PRE-TIN	0.30 [.012] PH BRZ	350079-4
PRE-TIN	0.30 [.012] BRASS	350079-1
FINISH	MATERIAL	PART NO

METRIC

THIS DRAWING IS A CONTROLLED DOCUMENT. FOR AMP INCORPORATED. IT IS SUBJECT TO CHANGE AND THE CONTROLLING ENGINEERING ORGANIZATION SHOULD BE CONTACTED FOR THE LATEST REVISION.

THIS DRAWING IS A CONTROLLED DOCUMENT.

DIMENSIONS: mm[INCHES]

TOLERANCES UNLESS OTHERWISE SPECIFIED:
0 PLC ± –
1 PLC ± –
2 PLC ± 0.25 [.010]
3 PLC ± –
4 PLC ± –
ANGLES ± –

MATERIAL: SEE TABLE
FINISH: SEE TABLE

DWN K. SALMON 2-15-93
CHK R. SWING 2-15-93
APVD C. MARTIN 2-22-93
PRODUCT SPEC —
APPLICATION SPEC —
WEIGHT —

TE Connectivity

NAME: PIN, MATE-N-LOK™

SIZE	CAGE CODE	DRAWING NO	RESTRICTED TO
A2	00779	C-350079	—

CUSTOMER DRAWING | SCALE 5:1 | SHEET 1 OF 1 | REV U2

350079

1471-9 (3/11)