THIS DRAWING IS UNPUBLISHED. RELEASED FOR PUBLICATION –,– .
© COPYRIGHT – BY TYCO ELECTRONICS CORPORATION. ALL INTERNATIONAL RIGHTS RESERVED.

LOC	DIST
AJ	16

REVISIONS

P	LTR	DESCRIPTION	DATE	DWN	APVD
	K	REVISED PER ECO–10–008433	20MAY10	HMR	KW

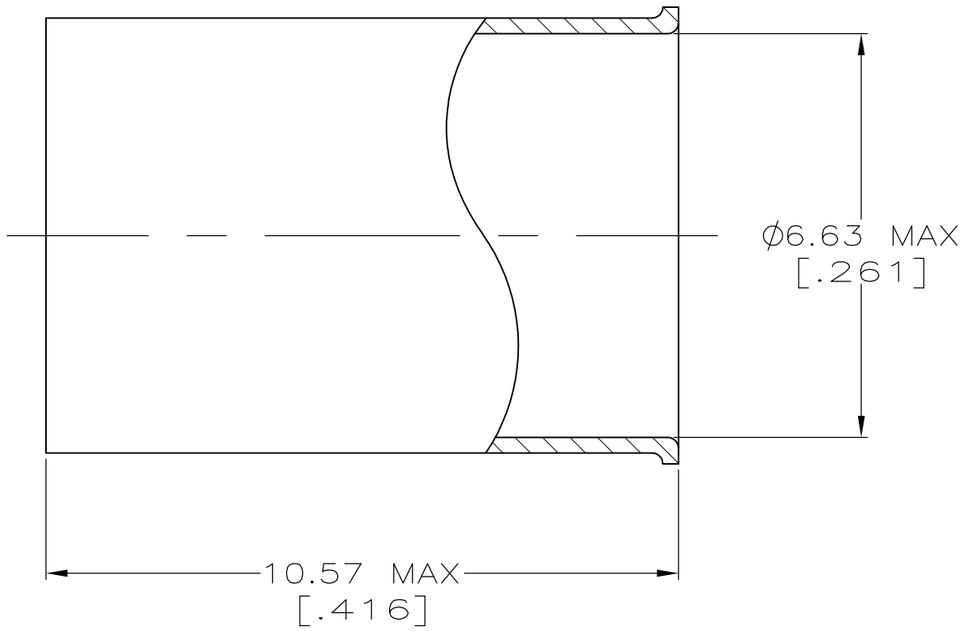

1. COPPER ALLOY

2. GOLD PLATE PER MIL–G–45204, 0.08μm [.0000030] MIN THICKNESS

3. SILVER PLATE PER QQ–S–365, 5.08μm [.000200] MIN THICKNESS

4. TIN–LEAD PLATE PER ASTM–B–545, 2.54μm [.000100] MIN THICKNESS

	FINISH	PART NUMBER
OBSOLETE	4	2–329041–5
	4	2–329041–3
OBSOLETE	2	2–329041–1
	3	329041

THIS DRAWING IS A CONTROLLED DOCUMENT.

DIMENSIONS: mm [INCHES]

TOLERANCES UNLESS OTHERWISE SPECIFIED:
0 PLC ± –
1 PLC ± –
2 PLC ± –
3 PLC ± –
4 PLC ± –
ANGLES ± –

MATERIAL: SEE NOTES

FINISH: SEE TABLE

DWN MICHAEL E. COWHER 10NOV95
CHK FRANK MORANA 10NOV95
APVD FRANK MORANA 10NOV95
PRODUCT SPEC —
APPLICATION SPEC —
WEIGHT —

Tyco Electronics
Tyco Electronics Corporation
Harrisburg, PA 17105–3608

NAME: FERRULE
—

SIZE	CAGE CODE	DRAWING NO	RESTRICTED TO
A3	00779	C–329041	—

CUSTOMER DRAWING

SCALE 10:1 SHEET 1 OF 1 REV K

1470–19 (1/08)