THIS DRAWING IS UNPUBLISHED RELEASED FOR PUBLICATION 2015
© COPYRIGHT 2015 BY - TE CONNECTIVITY ALL RIGHTS RESERVED.

LOC	DIST
-	-

REVISIONS

P	LTR	DESCRIPTION	DATE	DWN	APVD
	NC	NEW RELEASE PER E.O. P15534	29JAN1998	-	RDR
	A	REVISED PER E.O. P17088	23JAN2001	-	RDR
	B	REVISED PER E.O. P17309	14JUN2001	-	RDR
	C	REVISED AS PER ECO-15-003592	30MAR2015	VNB	DM

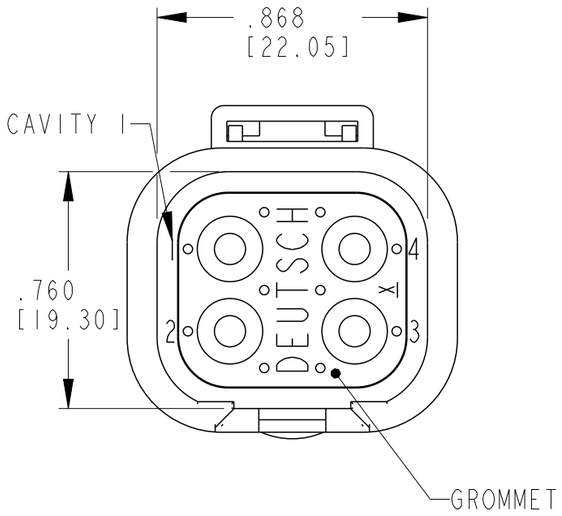

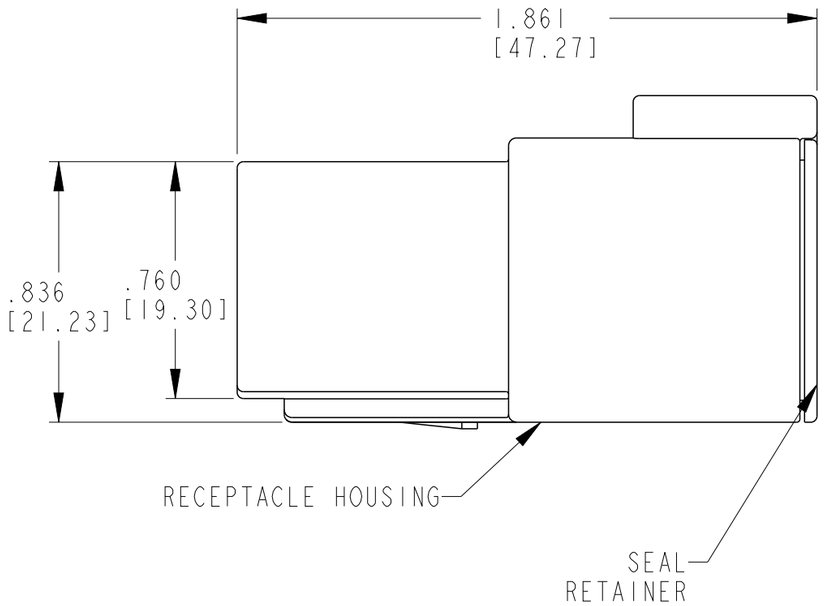

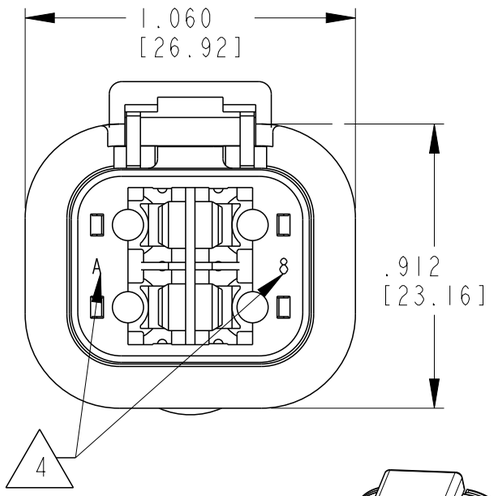

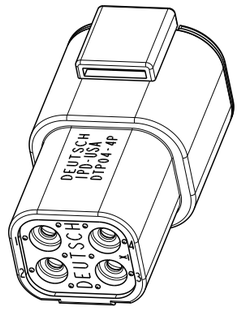

4. DATE CODE: MONTH IS REPRESENTED BY SEQUENTIAL ALPHA CHARACTERS.
EX: A=JANUARY; YEAR IS REPRESENTED BY LAST NUMERICAL DIGIT. EX: 8=2008

3. THE RECEPTACLE MATES WITH DTP06-4S-XXXX PLUG
(XXXX = ALL MODIFICATIONS)

2. MATERIAL:
RECEPTACLE: PA66 GF15 (GREY)
SEAL RETAINER: PA66 GF15 (GREY)
INTERFACE SEAL: SILICONE, PHENYL FLUID LUBED (GREEN)

1. SECONDARY WEDGE LOCK SOLD SEPARATELY: WP-4P-XXXX
(XXXX = ALL MODIFICATIONS)

NOTES: UNLESS OTHERWISE SPECIFIED

TE INTERNAL PN	DEUTSCH PN
DTP04-4P	DTP04-4P

CONTACT SIZE	MIN. INSUL. O.D.	MAX INSUL. O.D.	WIRE RANGE
12	.134 [3.40]	.170 [4.32]	10-14 AWG [5.0-2.0mm²]

THIS DRAWING IS A CONTROLLED DOCUMENT.

DIMENSIONS: INCHES[mm]

TOLERANCES UNLESS OTHERWISE SPECIFIED:
0 PLC ±-
1 PLC ±-
2 PLC ±-
3 PLC ±0.025 [0.64]
4 PLC ±-
ANGLES ±-

MATERIAL 2

FINISH -

DWN D. MEYER 21AUG1998
CHK A.ROLINSKI 12JUN2001
APVD R. REED 14JUN2001
PRODUCT SPEC 0425-015-0000
APPLICATION SPEC 0425-015-0000
WEIGHT 17.7g

TE Connectivity

NAME RECEPTACLE, 4PIN, SIZE 12
INLINE
DTP SERIES

SIZE	CAGE CODE	DRAWING NO	RESTRICTED TO
A3	4AFU8	C-DTP04-4P	-

Customer Drawing SCALE 3:1 SHEET 1 OF 1 REV C

1470-19 (3/11)